Measure C Charter School Committee, Members

Achieve Charter School: Courtney Howe Blue Oak Charter School: Tim Drury & Trisha Atehortua Inspire School of Arts and Sciences: Jen Josephson & Peggy Hawks Chico Country Day Charter School: Stuart Langford & Wendy Fairon Nord Country School: Ed Johnson & Tanner Schaffer CORE Butte Charter School: Mary Cox & Jenna Springer Sherwood Montessori: Michelle Yezbick & Pat Casey Forest Ranch Charter School: Christia Marasco Wildflower Open Classroom: Tom Hicks & Steve Tchudi

Chico Unified School District Measure C Charter School Committee Meeting Notice

Date: November 16, 2026
Time/Location: 4:00 pm CORE Butte Charter School, 2847 Notre Dame Blvd. Chico, CA 95928

Agenda

Information, Procedures, and Conduct of CUSD Measure C Charter School Committee Meetings:

Student Participation:
At the discretion of the Chair, students may be given priority to address items to the Committee
Public input on specific agenda items and those items not on the agenda:
The CUSD Measure C Charter School Committee welcomes and encourages public comments. Any person desiring to speak shall be allowed to speak during public comment time and can speak once on any agenda item when it is being discussed. Speaking time shall generally be limited to three minutes unless a longer period is permitted by the Committee Chair. In the case of numerous requests to address the same item, the Committee may select representatives to speak on each side of the item. Each person who addresses the Committee must be first recognized by the presiding officer and give his or her name. Comments must be directed to the Committee as a whole and not to individual committee members. The Committee shall not take action or enter into discussion or dialog on any matter that is not on the meeting agenda, except as allowed by law. Items brought forth at this part of the meeting may be taken under advisement by the Committee and may be placed on the agenda of a subsequent meeting for discussion or action by the Committee at the discretion of the Committee Chair & Vice Chair.
Special Needs: If you have special needs because of a disability or you require assistance or auxiliary aids to participate in the meeting, please contact the CUSD office at 530.891.3000. CUSD will attempt to accommodate your disability.
Copies of Agendas and Related Materials: Materials are available at the meeting, on the CUSD website at www.chicousd.org, or in the district office prior to the meeting @ 1163 East 7th Street, Chico, CA 95928.

1. REGULAR SESSION:
    - 1.1 Call to Order and Roll Call
        - Achieve Charter School:
        - Blue Oak Charter School:
        - Inspire School of Arts and Sciences:
        - Nord Country School:
        - Chico Country Day Charter School:
        - CORE Butte Charter School:
        - Sherwood Montessori:
        - Forest Ranch Charter School:
        - Wildflower Open Classroom:
    - 1.2 Approval of Minutes: October 26, 2026 Regular Meeting Minutes
2. PUBLIC COMMENTS:
3. DISCUSSION/ACTION ITEMS:
    - 3.1. Project Recommendation Form: Chico Country Day School - Steel Storage Building
    - 3.2. Project Recommendation Form: Chico Country Day School - Feasibility Study for Middle School
4. ITEMS FROM COMMITTEE MEMBERS:
5. Next Meeting: December 14, 2026
6. ADJOURNMENT

Measure C Charter School Committee, Members

Achieve Charter School: Courtney Howe Blue Oak Charter School: Tim Drury & Trisha Atehortua Inspire School of Arts and Sciences: Jen Josephson & Peggy Hawks Chico Country Day Charter School: Stuart Langford & Wendy Fairon Nord Country School: Ed Johnson & Tanner Schaffer CORE Butte Charter School: Mary Cox & Jenna Springer Sherwood Montessori: Michelle Yezbick & Pat Casey Forest Ranch Charter School: Christia Marasco Wildflower Open Classroom: Tom Hicks & Steve Tchudi

Chico Unified School District Measure C Charter School Committee Meeting Notice

Date: October 26, 2026
Time/Location: 4:00 pm CORE Butte Charter School, 2847 Notre Dame Blvd. Chico, CA 95928

Minutes

Information, Procedures, and Conduct of CUSD Measure C Charter School Committee Meetings:

Student Participation:
At the discretion of the Chair, students may be given priority to address items to the Committee
Public input on specific agenda items and those items not on the agenda:
The CUSD Measure C Charter School Committee welcomes and encourages public comments. Any person desiring to speak shall be allowed to speak during public comment time and can speak once on any agenda item when it is being discussed. Speaking time shall generally be limited to three minutes unless a longer period is permitted by the Committee Chair. In the case of numerous requests to address the same item, the Committee may select representatives to speak on each side of the item. Each person who addresses the Committee must be first recognized by the presiding officer and give his or her name. Comments must be directed to the Committee as a whole and not to individual committee members. The Committee shall not take action or enter into discussion or dialog on any matter that is not on the meeting agenda, except as allowed by law. Items brought forth at this part of the meeting may be taken under advisement by the Committee and may be placed on the agenda of a subsequent meeting for discussion or action by the Committee at the discretion of the Committee Chair & Vice Chair.
Special Needs: If you have special needs because of a disability or you require assistance or auxiliary aids to participate in the meeting, please contact the CUSD office at 530.891.3000. CUSD will attempt to accommodate your disability.
Copies of Agendas and Related Materials: Materials are available at the meeting, on the CUSD website at www.chicousd.org, or in the district office prior to the meeting @ 1163 East 7th Street, Chico, CA 95928.

1. REGULAR SESSION:

1.1 Call to Order and Roll Call

Jenna Springer called the meeting to order at **4:00 p.m.**

Blue Oak Charter School: Tim Drury
Inspire School of Arts and Sciences: Peggy Hawks
Chico Country Day Charter School: Stuart Langford
CORE Butte Charter School: Jenna Springer
Sherwood Montessori: Michelle Yezbick
Forest Ranch Charter School: Christia Marasco
Wildflower Open Classroom: Steve Tchudi

ABSENT:
Achieve Charter School: Courtney Howe
Nord Country School: Ed Johnson

1.2 Approval of Minutes: August 24, 2026 Regular Meeting Minutes

Stuart Langford motioned to approve item 1.2 Approval of Minutes: August 24, 2026 Regular Meeting Minutes, **Tim Drury** seconded the motion.

Approved	**Aye**	**Nay**	**Abstain**	**Absent**
Blue Oak: Tim Drury	X			

Inspire: Peggy Hawks	X			
Nord: Ed Johnson				X
CCDS: Stuart Langford	X			
CORE Butte: Jenna Springer	X			
Sherwood: Michelle Yezbick	X			
Forest Ranch: Robin Gebhardt	X			
Wildflower: Steven Tchudi	X			
Achieve: Courtney Howe				X

2. PUBLIC COMMENTS: **Tim Drury congratulates Julie Kistle's upcoming retirement**

3. DISCUSSION/ACTION ITEMS:

3.1. Spending Requirements for Bond Proceeds Allocated to Charter Schools

Chico Unified School District representatives shared that they would like a plan for the series A portion of Measure C to be presented by the charters in January.

No Action Required

3.2. Measure C 65% Pot Application

Inspire has had some savings that will be credited back to the 65% pot of funding available for charters. Applications will be reviewed at the end of July 2027.

No Action Required

3.3. Borrowing Agreement with Chico Country Day School and Blue Oak Charter School

Michelle Yezbick motioned to approve the Borrowing Agreement with Chico Country Day School and Blue Oak Charter School, **Peggy Hawks** seconded the motion. The motion passed unanimously.

Approved	**Aye**	**Nay**	**Abstain**	**Absent**
Blue Oak: Tim Drury	X			
Inspire: Peggy Hawks	X			
Nord: Ed Johnson				X
CCDS: Stuart Langford	X			
CORE Butte: Jenna Springer	X			
Sherwood: Michelle Yezbick	X			
Forest Ranch: Christia Marasco	X			
Wildflower: Steven Tchudi	X			
Achieve: Courtney Howe				X

3.4. Project Recommendation Form: Chico Country Day School - Steel Storage Building

This item was tabled from the agenda per Chico Country Day's request.

3.5. Project Recommendation Form: Blue Oak Charter School - New Campus at Apodaca Street/Bruce Road

Michelle Yezbick motioned to approve the Project Recommendation Form: Blue Oak Charter School - New Campus at Apodaca Street/Bruce Road, **Christia Marasco** seconded the motion. The motion passed unanimously.

Approved	Aye	Nay	Abstain	Absent
Blue Oak: Tim Drury	X			
Inspire: Peggy Hawks	X			
Nord: Ed Johnson				X
CCDS: Stuart Langford	X			
CORE Butte: Jenna Springer	X			
Sherwood: Michelle Yezbick	X			
Forest Ranch: Christia Marasco	X			
Wildflower: Steven Tchudi	X			
Achieve: Courtney Howe				X

4. ITEMS FROM COMMITTEE MEMBERS:

5. Next Meeting: November 16, 2026

6. ADJOURNMENT
Tim Drury motioned to adjourn the meeting, **Stewart Langford** seconded the motion.

Approved	Aye	Nay	Abstain	Absent
Blue Oak: Tim Drury	X			
Inspire: Peggy Hawks	X			
Nord: Ed Johnson				X
CCDS: Stuart Langford	X			
CORE Butte: Jenna Springer	X			
Sherwood: Michelle Yezbick	X			
Forest Ranch: Christia Marasco	X			
Wildflower: Steven Tchudi	X			
Achieve: Courtney Howe				X

The meeting was adjourned at **4:08 p.m.**

Attestation of Committee Secretary:_____

Measure C Charter School Facilities Committee
Project Recommendation Form for Consideration by CUSD Board of Trustees

GENERAL INFORMATION:

Submission Meeting Date	11/16/2026
Name of School	Chico Country Day Charter School
Address of School	102 W 11th ST, Chico, CA 95928
Description of School Educational Program	TK-8 Free Public Charter School
Contact Name	Wendy Fairon
Contact Phone/Email	(530) 895-2650
Charter Renewal Date	2028
CDS Code	04 61424 6113773

1. **Type of Project:**
   - __x__ Planning
   - _____ Construction
   - _____ Health Safety (Including ADA)
   - _____ Modernization/Repair/Renovation/Improve
   - _____ Purchase or lease Project
   - _____Other (including FF&E)

2. **Project Information:**
   a. Reason for project request: Feasibility study for middle school charter expansion.
   b. Narrative/Conceptual View: Feasibility Study on the expansion of the existing Chico Country Day School campus on a piece of property owned by the school, located at 1030 Broadway Street, Chico,
   _____
   c. Brief description of project schedule/timeline *(including planning & completion):* _____
   _Feasibility study to begin after committee approval._____
   _____
   _____

3. **Charter School Property Project Location**: *(If project location is different from address above.)*
   _____
   a. Does your school currently operate on a CUSD School Site: _____ yes _x__ no
   b. Does your school lease property/buildings from a private owner: _____ yes __x_ no

4. **Charter School Enrollment:**
   a. Current Enrollment and ADA: _603 enrollment, 573.43 ADA_____
   b. Does the current facility have the capacity for the population and projected enrollment for the next five (5) years: _x___ Yes ____ No

5. **Financial Questions**
   a. Estimated Project Cost: ___$10,000_____
   b. What were your cash reserves as a percent of expenditures at the end of the prior fiscal year?
   _____

6. **Preliminary Estimate (Cost)**

Measure C Allocation	$2,417,194
Less Previously Allocated Funds	$40,848.81

Less Current Project Funds Requested	$10,000
Remaining Allocation	$2,366,345.19

School Facilities Projects to be Funded with Proceeds of Bonds

Bond proceeds will be expended to "improve local school classrooms for math, reading, writing, science, workforce training; replace/ repair leaky roofs, windows, plumbing, heating, cooling; update school safety; expand facilities for elementary schools and reading/ literacy programs" - Measure C

Documentation ***(please indicate those completed)***

Feasibility Study and Site Review	__x__ *Included*	___ *Not Applicable*
Enrollment Capacity: Current Facility and/or Proposed	_____ *Included*	___ *Not Applicable*
Pre-Schematics *(to be completed by a District approved architect and/or engineering team)*	_____ *Included*	___ *Not Applicable*
Facility Assessment	_____ *Included*	___ *Not Applicable*
Map or Sketch Showing Location of Project	_____ *Included*	___ *Not Applicable*
Schematic Drawing(s) *(areas of work)*	_____ *Included*	___ *Not Applicable*
CEQA Process Determination *(pre-CEQA-form)*	_____ *Included*	___ *Not Applicable*
Design Development Drawings	_____ *Included*	___ *Not Applicable*
Design or Bid Estimate	_____ *Included*	___ *Not Applicable*
Construction Documents	_____ *Included*	___ *Not Applicable*

For Committee Use:

CORE QUESTIONS:

	Yes	No
1. Does the project fall under the bond language?	☐	☐
2. Given the life span of a bond, did the proposal explain how this project was an appropriate use of funds?	☐	☐
3. Date of Charter School Board Approval_____		

MEASURE C—CHARTER FACILITIES COMMITTEE APPROVAL

Date of Committee Approval: _____

Attestation of Committee Secretary: _____

For questions or clarifications relative to the completion of this application, please contact:
Charise Bromley at cbromley@chicousd.org or (530) 891-3000 x. 20127

Measure C Charter School Facilities Committee
Project Recommendation Form for Consideration by CUSD Board of Trustees

GENERAL INFORMATION:

Submission Meeting Date	October 26, 2026
Name of School	Chico Country Day
Address of School	102 W 11th St, Chico, CA 95928
Description of School Educational Program	TK-8 Free Public Charter School
Contact Name	Wendy Fairon
Contact Phone/Email	530-895-2650, wfairon@chicocountryday.org
Charter Renewal Date	2028
CDS Code	04 61424 6113773

1. **Type of Project:**
   _____ Planning
   __x___ Construction
   _____ Health Safety (Including ADA)
   _____ Modernization/Repair/Renovation/Improve
   _____ Purchase or lease Project
   _____Other (including FF&E)

2. **Project Information:**
   a. **Reason for project request:** CCDS requires additional secure, weather-resistant on-site storage for school equipment, materials, and supplies. The project will increase usable storage capacity and provide a durable, long-term facilities solution.
   b. **Narrative/Conceptual View:** CCDS proposes the purchase and installation of a 14' x 35' steel storage building on the school campus. The proposed structure will provide approximately 490 square feet of additional enclosed storage space. The project includes the steel building and associated components as detailed in the vendor proposal, with engineered plans and anchoring/foundation specifications.
   The total project cost is $12,309.20, with $2,250.39 funded through remaining Measure K funds and $10,058.81 requested from Measure C.
   c. **Brief description of project schedule/timeline *(including planning & completion)*:** Project planning and vendor selection have been completed. CCDS Board approval is scheduled for October 14, 2026. Following Board and Measure C funding approval, CCDS will proceed with ordering, site preparation, delivery, and installation of the steel storage building. Final completion will be dependent upon vendor lead times and any required permitting/site preparation.

3. **Charter School Property Project Location**: *(If project location is different from address above.)*
   _____
   a. Does your school currently operate on a CUSD School Site: __x___ yes _____ no
   b. Does your school lease property/buildings from a private owner: _____ yes __x___ no

4. **Charter School Enrollment:**
   a. Current Enrollment and ADA: 603, 590.09 ADA
   b. Does the current facility have the capacity for the population and projected enrollment for the next five (5) years: _x__ Yes ____ No

5. **Financial Questions**
   a. Estimated Project Cost:$10,058.81
   b. What were your cash reserves as a percent of expenditures at the end of the prior fiscal year?
   8%

6. **Preliminary Estimate (Cost)**

Measure C Allocation	$2,417,194
Less Previously Allocated Funds	$29,807.74
Less Current Project Funds Requested	$11,041.07
Remaining Allocation	$2,376,345.19

School Facilities Projects to be Funded with Proceeds of Bonds

Bond proceeds will be expended to "improve local school classrooms for math, reading, writing, science, workforce training; replace/ repair leaky roofs, windows, plumbing, heating, cooling; update school safety; expand facilities for elementary schools and reading/ literacy programs" - Measure C

Documentation ***(please indicate those completed)***

Feasibility Study and Site Review	_____ *Included*	__x_ *Not Applicable*
Enrollment Capacity: Current Facility and/or Proposed	_____ *Included*	__x_ *Not Applicable*
Pre-Schematics *(to be completed by a District approved architect and/or engineering team)*	__x___ *Included*	___ *Not Applicable*
Facility Assessment	_____ *Included*	_x__ *Not Applicable*
Map or Sketch Showing Location of Project	_____ *Included*	_x__ *Not Applicable*
Schematic Drawing(s) *(areas of work)*	___x__ *Included*	___ *Not Applicable*
CEQA Process Determination *(pre-CEQA-form)*	_____ *Included*	_x__ *Not Applicable*
Design Development Drawings	_____ *Included*	_x__ *Not Applicable*
Design or Bid Estimate	___x__ *Included*	___ *Not Applicable*
Construction Documents	_____ *Included*	_x__ *Not Applicable*

For Committee Use:

CORE QUESTIONS:

	Yes	No
1. Does the project fall under the bond language?	☐	☐
2. Given the life span of a bond, did the proposal explain how this project was an appropriate use of funds?	☐	☐

3. Date of Charter School Board Approval_____

MEASURE C—CHARTER FACILITIES COMMITTEE APPROVAL

Date of Committee Approval: _____

Attestation of Committee Secretary: _____

For questions or clarifications relative to the completion of this application, please contact:
Charise Bromley at cbromley@chicousd.org or (530) 891-3000 x. 20127

Manufacturer :

American Carports, Inc.
457 North Broadway Street - Joshua, TX 76058
American Carports, Inc is a California state licensed Contractor (Lic. No. 879371) and bonded (CSLB Bond Number T1495L1)
The Responsible Managing Officer is Melton Castillo.

Contract # ODR-000524

Ideal Steel Buildings

AUTHORIZED DEALER
2576 State Hwy 32 • Chico, CA 95973
Call (530)893-8474 • **Email** : info@idealsteelbuildings.com

Ready: ☐ Not Ready: ☐ Financed: ☐

Date 09/23/2026

Buyer Name(S) Chico Country Day School Poc Stuart Langford **County** Butte County

Buyer Address 102 W 11th St, Chico, Ca 95928 **City** Chico **State** CA **Zip** 95928

Phone _____ **(Alternative #)** (530) 588-6890 **(Email)** slangford@chicocountryday.org

Site (Unit location if different from above): _____

Building Type: ☐ Shop ☑ Garage ☐ Carport ☐ Custom

Description	Width	Roof Length	Frame Length	Leg Height	Gauge
18x35x11 storage (purchase order)	18	36	35	11	14

PRICE INCLUDES DELIVERY AND INSTALLATION		
1	Generic Plans : Ground Anchors, 20psf Roof, 105mph wind	$0.00
1	Purchase Order: Deposit to be deferred until Completion	$0.00
1	Total amount of $13,220.87 due upon completion	$0.00

Total Sale: $12,166.09

9.25% **Tax:** $1,125.37
Amnt. based on Tax Rate Of Install Location

Subtotal: $13,291.46

Return Trip Transportation Fee: _____
(if applicable)

Engineering Plans $0.00
(Not part of Down payment and is due upon ordering plans)

Equipment / Additional Labor $0.00
(If applicable)

Grand Total $13,291.46

Down Payment: $2,433.22

Balance Due: $10,858.24
* Credit card fee may apply to final payment

All Orders C.O.D.

Color: Roof Black Sides Gallery Blue Ends Gallery Blue Trim Black
Wainscot

Install Surface: **Site Level:** ☑ Yes ☐ No **Power Available :** ☐ Yes ☑ No
☐ Ground ☑ Cement ☐ Other (Specify)

THINGS YOU SHOULD KNOW AND THAT YOU AGREE TO:

1. It is solely the Buyer's responsibility to check restrictions regarding installation of the building. Some counties may require different foundation minimums. Foundation and site prep shall be the sole responsibility of the Buyer. The site must be level and have a minimum of 3' workspace on all sides where panels will be installed. If buyer fails to properly level site, the building may be certified "AS IS/ No warranty" under severe circumstances. It is the Buyer's responsibility to research local building requirements and obtain the required permits. **Unless stated on the order,** all buildings come standard with **20 psf live roof load** and **105 mph winds.**

2. Height is measured from the top of the base rail to the sidewall (leg height), not the peak. The base rail length is 12 inches shorter than the roof. Widths and lengths are measured at concrete edges. It is recommended to contact your sales representative

3. If there is a price discrepancy over $50.00, the contractor/dealer reserves the right to cancel the order. If the Buyer wishes to place the order on hold, the contractor will honor the revised price for only 30 days. After 6 months, the order may be subject to pricing updates.

4. Standard buildings not exceeding 30' wide and 12' leg will usually come with a free set of generic plans which do not have calculations. If Specific plans & calculations can be provided upon request, for an additional non-refundable fee which MUST be paid in advance.

5. Specific engineering plans can sometimes come back with additional trusses and/or framing per customers local code, this will require change order/price adjustments for these added materials if required.

6. It is required that ground, gravel, or blacktop installation be securely fastened with Mobile Home anchors. The companies involved will not be responsible for any damages to the structure or property if the Buyer chooses to waive proper anchors. If it is not possible to install all the mobile home anchors due to rocky or other ground conditions, Buyer will be reimbursed for the anchors that are not used. This may require concrete piers be provided by the buyer in order to get proper anchoring to pass final inspections

7. The above pricing does not include any extra additions that are not listed as a line item. Any changes requested after the building has been fabricated will be subject to a substantial revision fee. Contractors reserve the right to set and apply these additional charges, based on the desired changes.

8. **Down payments are fully refundable for up to 90 days** if the buyer's permit request is denied. However, the down payment becomes non-refundable once any of the following conditions are met: the permit is approved, the customer's foundation is completed, or the customer has accepted an installation date. Additionally, down payments cannot be transferred or applied toward the balance of a separate order.

BALANCES OWING: Balance due must be paid in full upon installation. On Custom building orders, an additional 25% non-refundable payment towards the balance will be due prior to scheduling. If any balance is left unpaid at the time of delivery, the contractor will remain the owner of the Building. It is at contractor's discretion, to repossess the Building at any time or a lien may be placed on the real property at which the building install takes place. The buyer here by gives their full consent to enter the property to remove/repossess the buildings and/or materials if payment is not made after work has been completed.

By signing this, Buyer acknowledges and agrees with all the above terms and General Terms and Conditions pages

Customer Signature: _____ Date: _____

Dealer Signature: _____ Date: _____

FOR OFFICE USE ONLY

Approval/Authorization: _____

NOTICE: SEE OTHER SIDE OF THIS DOCUMENT FOR ADDITIONAL TERMS & CONDITIONS

Manufacturer :

American Carports, Inc.
457 North Broadway Street • Joshua, TX 76058
American Carports, Inc is a California state licensed Contractor (Lic. No. 879371) and bonded (CSLB Bond Number T1495L1)
The Responsible Managing Officer is Melton Castillo.

Contract # ODR-000524

Ideal Steel Buildings

AUTHORIZED DEALER
2576 State Hwy 32 • Chico, CA 95973
Call (530)893-8474 • **Email** : info@idealsteelbuildings.com

Ready: ☐ **Not Ready:** ☐ **Financed:** ☐

Date 09/23/2026

Buyer Name(S) Chico Country Day School Poc Stuart Langford **County** Butte County

Buyer Address 102 W 11th St, Chico, Ca 95928 **City** Chico **State** CA **Zip** 95928

Phone _____ **(Alternative #)** (530) 588-6890 **(Email)** slangford@chicocountryday.org

Site (Unit location if different from above): _____

Building Type: ☐ **Shop** ☑ **Garage** ☐ **Carport** ☐ **Custom**

Description	Width	Roof Length	Frame Length	Leg Height	Gauge
18x35x11 storage (purchase order)	18	36	35	11	14

PRICE INCLUDES DELIVERY AND INSTALLATION		
1	18X35' A-Frame Vertical Roof (Roof 36' | Ga : 14 | 3/12'	$5,240.00
	Roof Pitch)	
1	11' Height	$640.00
2	Ends - Closed | Horizontal	$2,160.00
2	Sides - Closed | Horizontal	$1,865.00
1	Insulation (Thermal 5M Prodex) (Roof Only)	$1,212.75
1	Front - 8x8' (Roll-Up Upgraded Chain Hoist- Lock from	$1,345.00
	Inside)	
2	Back - 12x12" (Gable Vent)	$250.00
2	Right - 36x36" Window (Double Pane With Grid)	$490.00
1	Right - 36x80" Walk-in Door (Series 99 E (White))	$925.00
16	Mobile Home Anchor (Ground anchors)	$0.00
1	Colored Screws	$185.30
1	Manufacturer Discount	($2,146.96)

Total Sale: _____

Tax: _____
Amnt. based on Tax Rate Of Install Location

Subtotal: _____

Return Trip Transportation Fee: _____
(if applicable)

Engineering Plans _____
(Not part of Down payment and is due upon ordering plans)

Equipment / Additional Labor _____
(If applicable)

Grand Total _____

Down Payment: _____

Balance Due: _____
* Credit card fee may apply to final payment

All Orders C.O.D.

Color: Roof Black Sides Gallery Blue Ends Gallery Blue Trim Black
Wainscot

Install Surface: ☐ Ground ☑ Cement ☐ Other (Specify)

Site Level: ☑ Yes ☐ No **Power Available :** ☐ Yes ☑ No

THINGS YOU SHOULD KNOW AND THAT YOU AGREE TO:

1. It is solely the Buyer's responsibility to check restrictions regarding installation of the building. Some counties may require different foundation minimums. Foundation and site prep shall be the sole responsibility of the Buyer. The site must be level and have a minimum of 3' workspace on all sides where panels will be installed. If buyer fails to properly level site, the building may be certified "AS IS/ No warranty" under severe circumstances. It is the Buyer's responsibility to research local building requirements and obtain the required permits. **Unless stated on the order,** all buildings come standard with **20 psf live roof load** and **105 mph winds.**

2. Height is measured from the top of the base rail to the sidewall (leg height), not the peak. The base rail length is 12 inches shorter than the roof. Widths and lengths are measured at concrete edges. It is recommended to contact your sales representative

3. If there is a price discrepancy over $50.00, the contractor/dealer reserves the right to cancel the order. If the Buyer wishes to place the order on hold, the contractor will honor the revised price for only 30 days. After 6 months, the order may be subject to pricing updates.

4. Standard buildings not exceeding 30' wide and 12' leg will usually come with a free set of generic plans which do not have calculations. If Specific plans & calculations can be provided upon request, for an additional non-refundable fee which MUST be paid in advance.

5. Specific engineering plans can sometimes come back with additional trusses and/or framing per customers local code, this will require change order/price adjustments for these added materials if required.

6. It is required that ground, gravel, or blacktop installation be securely fastened with Mobile Home anchors. The companies involved will not be responsible for any damages to the structure or property if the Buyer chooses to waive proper anchors. If it is not possible to install all the mobile home anchors due to rocky or other ground conditions, Buyer will be reimbursed for the anchors that are not used. This may require concrete piers be provided by the buyer in order to get proper anchoring to pass final inspections

7. The above pricing does not include any extra additions that are not listed as a line item. Any changes requested after the building has been fabricated will be subject to a substantial revision fee. Contractors reserve the right to set and apply these additional charges, based on the desired changes.

8. **Down payments are fully refundable for up to 90 days** if the buyer's permit request is denied. However, the down payment becomes non-refundable once any of the following conditions are met: the permit is approved, the customer's foundation is completed, or the customer has accepted an installation date. Additionally, down payments cannot be transferred or applied toward the balance of a separate order.

BALANCES OWING: Balance due must be paid in full upon installation. On Custom building orders, an additional 25% non-refundable payment towards the balance will be due prior to scheduling. If any balance is left unpaid at the time of delivery, the contractor will remain the owner of the Building. It is at contractor's discretion, to repossess the Building at any time or a lien may be placed on the real property at which the building install takes place. The buyer here by gives their full consent to enter the property to remove/repossess the buildings and/or materials if payment is not made after work has been completed.

By signing this, Buyer acknowledges and agrees with all the above terms and General Terms and Conditions pages

Customer Signature: _____ Date: _____

Dealer Signature: _____ Date: _____

FOR OFFICE USE ONLY

Approval/Authorization: _____

NOTICE: SEE OTHER SIDE OF THIS DOCUMENT FOR ADDITIONAL TERMS & CONDITIONS

NOTICE OF RIGHT TO CANCEL

Date of transaction 09/23/2026 (Date) **Cancel no later than midnight of** _____ (Date)

_____ **(Buyer's Initials)** The law requires that the Contractor give you a notice explaining your right to cancel. Initial the check-box if the Contractor has given you a "Notice of the Three-Day Right to Cancel".

You, the buyer, have the right to cancel this contract within three business days.

If you cancel, the contractor must return to you anything you paid within 10 days of receiving the notice of cancellation. For your part, you must make available to the contractor at your residence, in substantially as good condition as you received them, goods delivered to you under this contract or sale. Or, you may, if you wish, comply with the contractor's instructions on how to return the goods at the contractor's expense and risk. If you do make the goods available to the contractor and the contractor does not pick them up within 20 days of the date of your notice of cancellation, you may keep them without any further obligation. If you fail to make the goods available to the contractor, or if you agree to return the goods to the contractor and fail to do so, then you remain liable for performance of all obligations under the contract.

The goods must be returned in the same condition as upon delivery. Any changes to the goods by installation or otherwise, whether installed by Contractor or Buyer, will result in a partial or total deduction from your refund equal to Contractor's estimate of the value of any portion that is not reusable or resalable. If you choose to cancel your purchase and installation, the dealer to which you paid your down payment is responsible for returning your down payment and not American Carports, Inc.

You may cancel this transaction by e-mailing, mailing, faxing, or delivering a written notice to the contractor by midnight of the third business day after you received a signed and dated copy of the contract that includes this notice to:

American Carports, Inc.
457 North Broadway Street • Joshua, TX 76058
Fax: (817) 484-2182 or (866) 396-2057 **E-Mail:** orders@americansteelinc.com

Your name, your address, and the date you received the signed copy of the contract and this notice is required to process the cancellation of your order.

I Chico Country Day School Poc Stuart Langford (Buyer's Printed Name) **hereby cancel this transaction** _____ (Date)

_____
Buyer's Signature

Address City State Zip Code

Phone Number Fax Number E-Mail Address

General Terms and Conditions

1. **Breach of Contract.** A Party shall be in material breach and default under this Agreement upon one or more of the following events: a) The failure of such Party to properly perform or cause to be performed each and all of its duties and obligations as set forth in this Agreement. b) The breach of any representation, warranty, or covenant of the Party as set forth in this Agreement. c) The filing of a petition of bankruptcy by any Party or its creditors for relief of debt in any jurisdiction. AMERICAN CARPORTS may, if the Buyer fails to pay the full account balance due upon delivery and the Project Start Date, terminate this Agreement upon five business days written notice to the Buyer. On such termination, American Carports may recover from Buyer payment for all work completed and materials delivered and for any loss sustained by it thereon, including, but not limited to, loss of reasonable profit. A written notice must be given by either Party of a material breach of contract for other than for failure of Buyer to make a required payment, with an opportunity to cure within ten days of notice of a material breach of contract. In any dispute regarding this agreement, the prevailing party will be entitled to attorneys' fees as permitted by law.

2. **Notices by either Buyer or American Carports shall be given by certified or registered mail.** Except as to a warranty claim as set forth all notices shall be given to the addresses of Buyer and American Carports as set forth on the first page of this Agreement unless notice of change of address is given. Notices shall be deemed effective when sent.

3. **Time is of the essence in respect to the obligations of each party under this Agreement.**

4. **Transferability.** This Agreement shall be binding upon Buyer and American Carports and their respective successors and assigns. Neither Buyer nor American Carports may assign this Agreement without written consent of the other Party.

5. **Waiver.** The failure of either Buyer or American Carports to exercise any of its rights or options hereunder or to insist upon compliance with the provisions hereof by the other Party shall not constitute a waiver of the provisions and conditions of this Agreement with respect to any other or subsequent breach or waiver by either Party of its right at any time thereafter to require exact and strict compliance hereunder with all the provisions hereof. The rights and remedies are cumulative to those which may be granted by law.

6. **Governing Law.** This agreement shall be governed and construed under and in accordance with the laws of the State of California as an agreement made therein and performed in whole therein.

7. **Formation, Integration, Modification, and Severability.** This contract constitutes the entire understanding and agreement between Buyer and Seller (collectively, the "Parties") with respect to sale, manufacture, and delivery of the Building and related materials (the "Goods"). A separate additional written construction agreement is required for installation of the Building by Seller. **a) Severability.** In the event that any provision of this Agreement is held invalid or unenforceable by a court of competent jurisdiction, such determination shall not affect the validity of enforceability of the remainder of this Agreement, unless such provision is so material to this Agreement that fulfillment of the Parties' intent is thereby rendered impossible. **b) Integration.** This contract constitutes the entire understanding and agreement between Buyer and the Contractor with respect to installation of the Building and related materials. The terms of this contract are intended by the Parties as a final expression of their agreement with respect to these terms and also as a complete and exclusive statement of the terms. This agreement is a final, complete, and exclusive statement of the agreement of the Parties. No modifications, limitations, waivers or discharge of this agreement or any of its terms shall bind Seller unless in writing and signed by Seller's authorized employee at its home office. Notwithstanding anything to the contrary in this agreement, no modifications, limitation, waiver, or discharge of any provision of this agreement shall affect the Buyer's liabilities to Seller accrued prior thereto. Seller may correct unilaterally any mathematical and typographical errors in this agreement. Typed provisions of this agreement take precedence over printed provisions. A course of performance, course of dealing, or customs in the trade shall not constitute a modification or waiver by Seller of any right by Seller. This agreement is only for the benefit of the Parties, except all disclaimers and limitations applicable to Seller shall be for the benefit of Seller's agents, employees, contractors, and suppliers. If any provisions are determined to apply to third parties, all other provisions, including limitations, waivers, and disclaimers, shall also apply. In the event that any provision of this agreement is held invalid or unenforceable by a court of competent jurisdiction, such determination shall not affect the validity or enforceability of the remainder of this agreement, unless such provision is so material to this agreement that fulfillment of the Parties' intent is thereby rendered impossible.

8. **Attorneys' Fees.** In any dispute regarding this agreement, the prevailing party will be entitled to attorneys' fees as permitted by law.

9. **Prices, Payment, and Risk of Loss.** Prices contained in Seller's published price lists, if any, are subject to change without notice. Prices in individual written quotations or proposals are firm only for a period of thirty days from the date of the quotation, after which Buyer should inquire of Seller as to their validity and request a written confirmation or revision. Prices do not include taxes and Buyer shall pay all applicable sales or other taxes levied with respect to the Goods in this agreement, unless exempt therefrom. All prices are in United States dollars. Buyer shall pay all government fees levied on the installation and inspection of the Goods. Buyer shall pay upon receipt all invoices rendered by Seller for any such items Seller may pay. This agreement is for the manufacture and delivery of fabricated metal structures and the Goods shall be delivered F.O.B. the Buyer's place of delivery. Risk of loss passes to the Buyer upon tender of the Goods to the Buyer. Seller's breach of the agreement shall not affect the passing of the risk of loss to Buyer notwithstanding any provision of law to the contrary. It is Buyer's responsibility to ensure that the Building/carport is covered under Buyer's homeowner or other insurance. It is Buyer's sole responsibility to secure insurance coverage for the Building. Seller may unilaterally increase prices to cover increased costs (plus reasonable overhead and profit) of design, materials, and manufacturing required by changes requested by Buyer after the date of any quotation. All amounts due on installation or other event which requires the action or cooperation of Buyer which Buyer fails to supply timely shall become due upon such failure. If payment is made by check and the check is returned NSF, Buyer will be responsible for additional expenses incurred by Seller as a result of the returned check. Seller reserves the right to charge additional fees as allowed by law for checks returned NSF. There fees may include a $35 service charge.

10. **Delivery.** Shipping dates are estimated based on Seller's present engineering and manufacturing capacity and scheduling and may be revised by Seller upon receipt of or scheduling of Buyer's order. All shipping dates are approximate and shall be computed from the date of entry of the order on Seller's books. All shipping dates are further subject to Seller's prompt receipt from Buyer of a written purchase order or acceptance, letter of credit, down payment, and other condition as specified in this agreement, and of all drawings, information, and approvals necessary to provide the Goods and to grant any credit proposed in this agreement. All deliveries will take place at the site where the Building is to be installed, as stated herein above, unless otherwise specified above by the Buyer.

11. **Delay of Shipment or Performance Excused for Various Reasons.** If shipment of any item or othe performance by Seller is delayed at the request or due to the fault of the Buyer, the Seller, at its option, ma hold the item at the place of manufacture at the risk and expense of the Buyer from the time it is ready fo shipment. In the event of any such delay in shipment, full and final payment for an item shall be due and payable thirty days after the Buyer is notified that the item is ready for shipment. If the Seller is unwilling to accommodate Buyer by holding such item, the Buyer shall accept shipment immediately.

12. **Dates for Seller's performance are estimates only.** In addition, the Seller shall not be in default because of its delay or failure to deliver or perform resulting, in whole or in part, from (i) any foreign or domestic embargoes, seizures, acts of God, insurrections, war, or the adoption or enactment of any law, ordinance, regulation, ruling or order, or, (ii) the lack of usual means of transportation, fires, floods, explosions, strikes or any other accidents, contingencies, or events at the Seller's or its supplier's plant or elsewhere (whether or not beyond the Seller's control) which directly or indirectly interfere with, or render substantially more burdensome, Seller's production, delivery, or performance.

13. **Limited Warranty.** Seller warrants, for a period of 20 years from the date of completion of installation, against rust through on the framing only assuming normal user care and maintenance on 12-gauge material only. This warranty does NOT apply to 14-gauge materials. Seller warrants workmanship maintenance for a period of 1 year from date of complete installation, against general leaks, damaged delivered pieces, panels, trim, tubing, doors, braces, repairs and rust to the metal or frame of the building, only assuming normal care and maintenance. a) **Leaks.** Leaks that occur in the roof of the building where metal is fastened to the frame are covered in this 1-year maintenance warranty. i) Overlaps on Horizontal roof panels are not covered on buildings longer than 31ft. ii) No Warranty is provided for leaking at base rail or under the doors. (all doors: overhead, roll-up, and walk-in) iii) Skylights (clear panels) are not covered under the warranty. b) **Wind.** All buildings are installed with the standard rebar rod which does not provide any warranty against wind damage. (Customers may purchase the proper anchoring system, braces and supports which will provide a wind rating and/or warranty.) Wind Warranty is voided when customer uses their own anchors or when the anchors cannot be securely fastened into the ground due to rock or unleveled ground which does not allow the mobile home anchors to be properly fastened. i) Damages caused by wind to the sheet metal or trim are not covered i the 1-year limited warranty. ii) When a roll-up door or an overhead door is installed; the gap at the top is no a defect; therefore, it is not covered under this warranty. c) **Miscellaneous.** The limited workmanship warranty only applies to defects directly caused by original installation. If the purchaser damages the uni after delivery or installation; then he / she will become responsible to cover the cost of the materials labo to complete the repair. i) Screws. all of our units come with the standard galvanized screws. The color screws to match the color on the siding (metal panels) are available at an additional cost. ii) Additions. Any additions to the unit after a year or more after the original installation; will not have any warranties, nor is going to extend the warranties on the exiting unit, or the addition. 1. Any additions decided on site will not have any type of warranties. 2. No additions can be done to units that are 3 years or older. 3. No additions can be performed, if the purchaser doesn't have the original invoice to show that is one of our units. 4. Seller will not add or remove material (s) from units that are not ours. iii) No side jobs are going to be covered under the limited warranty. d) **Repair Claims Procedures.** Any claim under this limited warran must be in writing and sent to **American Carports Inc., 457 N Broadway St, Joshua, TX 76058**, and be received within 30 days of discovering the claimed defect. The following must be taken into consideration before any claim can be submitted: i) The claim has to be made by the original purchaser (the person on the contract.) 1. Calls received from another person not included on the contract, will not be processed as a claim. 2. The original purchaser has to give written/verbal authorization for another person to represent them. ii) The purchaser MUST have the original signed invoice to provide to seller, in order to present a claim. iii) American Carports Inc. reserves the right to ask the purchaser for pictures in order to process a claim. iv) The customer has to be aware that after a claim is received, the seller is going to conduct an investigation to determine the possible cause (s) of the issue; and after the research, a resolution is going to be presented. This will apply to any claim including tilted /collapsed units. 1.The seller must have a reasonable opportunity to inspect the claim, purchaser cannot perform any repair prior to said inspectio or the terms of the warranty could be voided. v) No made up information is going to be accepted, the purchaser must have the proper proof of contact with any of our customer service personnel. (representative name, voice mail, e-mail, etc.) vi) Rust: The 14-gauge steel option carries a 1 year no rust warranty (main frame material only. The 12-gauge main frame material 20 year no rust warranty. Both cases, assuming normal care and maintenance. [framing is described as rail, legs, and bows.] Units without any extra material (trusses, hat channels, etc..) written on the contract; are only rated for 30 PSF ground load. Check with your local ordinances before purchasing.

18' WIDE FRAME
'CARPORT STYLE' METAL BUILDING GENERICS



SCOPE OF PLANS:

1. TO PROVIDE STRUCTURAL DESIGN FOR A VARIETY OF PRE-FAB METAL BUILDINGS PER THE SPECIFIED DESIGN LOADS, AND APPLICABLE BUILDING CODES.
2. DOES NOT PROVIDE ANY ARCHITECTURAL, SITE, ZONING, HVAC, ELEC, MECH DESIGN OR REQUIREMENTS. THESE ITEMS MUST BE ADDRESSED BY THEIR RESPECTIVE PROFESSIONALS IN CHARGE.
3. DOES NOT PROVIDE ANY DOOR OR WINDOW DESIGN INFORMATION. THOSE SHALL BE ADDRESSED BY DOOR AND WINDOW MANUFACTURER.
4. THESE DOCUMENT SHALL NOT BE USED TO PERMIT OR JUSTIFY DESIGN OF AS-BUILT / EXISTING STRUCTURES OR BUILDINGS BUILT WITHOUT A PERMIT.

GENERAL DESIGN NOTES

1. THESE STRUCTURES ARE DESIGNED AS **RISK CATEGORY I (NON-HABITABLE)**, UTILITY / STORAGE / PRIVATE GARAGE / SHED TYPE BUILDINGS - THAT ONLY DESIGNED TO RESIST THE DEAD LOADS, LIVE LOADS, AND WIND LOADS LISTED UNDER "STRUCTURAL DESIGN CRITERIA". ANY ADDITIONAL LOADINGS WITHOUT RE-DESIGN OR ENGINEERING CONSULTATION SHALL NOT BE PERMITTED.
2. ALL MATERIALS IDENTIFIED BY A MANUFACTURER NAME MAY BE SUBSTITUTED WITH MATERIAL EQUAL OR EXCEEDING ORIGINAL.
3. ALL WELDED CONNECTIONS SHALL BE SHOP WELDED CONNECTIONS. **FIELD WELDING IS NOT PERMITTED NOR REQUIRED.**
4. ALL STRUCTURAL LIGHT GAUGE TUBING AND CHANNELS SHALL BE:
   ASTM A500 GRADE C OR EQUAL:
   Fy = 50 KSI Fu = 65 KSI
5. GYPSUM BOARD OR DRYWALL FINISH OR ANY BRITTLE BASE MATERIAL IS NOT CONSIDERED OR ACCOUNTED FOR ON THE DESIGN CRITERIA OF THIS STRUCTURE, U.N.O.

STRUCTURAL DESIGN CRITERIA

ALL CONSTRUCTION SHALL BE PROVIDED IN ACCORDANCE WITH THE PREVAILING CODES LISTED BELOW AND ALL APPLICABLE LOCAL REQUIREMENTS.

PREVAILING CODE:	CBC 2025
MINIMUM DESIGN STANDARD:	**ASCE 7-22**
OCCUPANCY GROUP:	U (CARPORT / UTILITY / GARAGE / SHED)
CONSTRUCTION TYPE:	V - B
RISK CATEGORY:	**I (NON-HABITABLE)**
1. ROOF DEAD LOAD (D)	**2.0** PSF (COLLATERAL)
2. ROOF LIVE LOAD (Lr)	Lr = **20** TO **61** PSF *(VARIES BASED ON FRAME SPACING AND DESIGN OPTIONS)*
3. SNOW LOAD (S)	
GROUND SNOW LOAD	Pg = **20** TO **90** PSF *(VARIES BASED ON FRAME SPACING AND DESIGN OPTIONS)*
IMPORTANCE FACTOR	Is = 0.80
THERMAL FACTOR	Ct = 1.2
EXPOSURE FACTOR	Ce = 1.0
ROOF SLOPE FACTOR	Cs = 1.0
FLAT ROOF SNOW LOAD	Pf = **20** TO **61** PSF
SLOPED ROOF SNOW LOAD	Ps = **20** TO **61** PSF
MINIMUM SNOW LOAD	Pm = **20**
4. WIND LOAD (W)	
EXPOSURE	C
DESIGN WIND SPEED	Vult = 105 TO **180** MPH *(VARIES BASED ON FRAME SPACING AND DESIGN OPTIONS)*
5. SEISMIC LOAD (E)	
DESIGN CATEGORY	C
IMPORTANCE FACTOR	Ie = 1.00

ASD LOAD COMBINATIONS:
1. D + (Lr OR S)
2. D + (0.6W OR ±0.7E)
3. D + 0.75 (0.6W OR ±0.7E) + 0.75 (Lr OR S)
4. 0.6D + (0.6W OR ±0.7E)

CONTACT INFORMATION

FOR QUESTIONS OR INFORMATION NEEDED PLEASE, CONTACT THE **METAL BUILDINGS MANUFACTURER LISTED ON PLANS.** ENGINEER OF RECORD REQUIRES AUTHORIZATION FROM THE METAL BUILDINGS MANUFACTURER TO ADDRESS ANY QUERIES

THE INFORMATION CONTAINED IN THESE DRAWINGS IS THE SOLE PROPERTY OF METAL BUILDING MANUFACTURER LISTED ON THIS PAGE. ANY REPRODUCTION IN PART OR WHOLE WITHOUT THE WRITTEN PERMISSION OF METAL BUILDING MANUFACTURER LISTED BELOW IS PROHIBITED. LEGAL ACTION WILL BE TAKEN AS NECESSARY AS A RESULT.

ANY REQUESTS, CHANGES, MODIFICATIONS REVISIONS TO INFORMATION PROVIDED IN THIS DOCUMENT WILL REQUIRE A COMPLETELY SEPARATE SITE-SPECIFIC SET OF PLANS; INQUIRE WITH THE LISTED METAL BUILDING MANUFACTURER.

STRUCTURAL SHEET INDEX

COVER SHEET	1
SCHEDULES & MEMBER - SECTIONS	2
FRAME SECTIONS & DETAILS	3
SPACING SCHEDULES & ENCLOSURE NOTES	4
PURLIN & GIRT SCHEDULES	5
SHEATHING OPTIONS	6
SIDE WALL FRAMING & OPENINGS	7
END WALL FRAMING & OPENINGS	8-A, 8-B
CORNER BRACING DETAILS	9
OPTIONAL LEAN-TO ADDITION	10
FOUNDATION OPTIONS	11-A TO 11-D

Omar Abu-Yasein
Digitally signed by Omar Abu-Yasein
Date: 2026.01.20 16:02:21 -05'00'

MANUFACTURED BY:

AMERICAN CARPORTS INC
457 N. Broadway,
Joshua, TX 76058
1-866-730-9865

ENGINEERED BY:

A&A ENGINEERING
CIVIL · STRUCTURAL

DRAWING INFORMATION

PROJECT: 18' Wide
LOCATION: STATE OF CALIFORNIA
PROJECT NO.: 233-26-0131
SHEET TITLE: COVER SHEET
SHEET NO.: 1 / 11
CHECKED BY: OAA DATE: 1/25/24

LEGAL INFORMATION

- ANY DUPLICATION OF THIS DRAWING IN WHOLE OR PART IS STRICTLY FORBIDDEN. ANYONE DOING SO WILL BE PROSECUTED UNDER THE FULL EXTENT OF THE LAW.
- DRAWINGS VALID UP TO 1 YEAR FROM DATE OF ISSUE.

SEAL:

REGISTERED PROFESSIONAL ENGINEER
CIVIL
OMAR A. ABU-YASEIN
C73389
STATE OF CALIFORNIA

STAMP EXPIRY: **DEC 31 2026**
DATE SIGNED: **JAN 20 2026**

CUSTOMER INFORMATION

OWNER: Chico Country Day School
ADDRESS:
102 W 11th St
Chico, CA 95928

DESIGN LOADS

GROUND SNOW:	30
ROOF LIVE LOAD:	20
BASIC WIND SPEED:	105

BUILDING INFORMATION

WIDTH:	18
LENGTH:	35
HEIGHT:	11

FRAME TYPE: [X] A-FRAME [ ] REGULAR
ENCLOSURE TYPE: [X] FULL [ ] PARTIAL [ ] OPEN

CERTIFICATION VALIDITY NOTICE

DATE OF PLANS EXPIRATION: **JAN 20 2027**
CERTIFICATION ON THESE DRAWINGS IS VALID FOR ONE YEAR FROM DATE OF ISSUE

TABLE 2.1: MEMBER PROPERTIES

NO.	LABEL	PROPERTY	DETAIL NO.
1	COLUMN POST	2.5" X 2.5" X 14GA TUBE	1
2	ROOF BEAM	2.5" X 2.5" X 14GA TUBE	1
3	BASE RAIL	2.5" X 2.5" X 14GA TUBE	1
4	PEAK BRACE	2.5" X 2.5" 14GA CHANNEL	4
5	KNEE BRACES	2.5" X 1.5" 14GA CHANNEL	4
6	CONNECTOR SLEEVE	2.25" X 2.25" X 12GA TUBE	2
7	BASE ANGLE	2" X 2" X 3" LG. 3/16" ANGLE	10
8	PURLIN	4" X 1" X 14GA / 18GA HAT CHANNEL	5
9	GIRT	4" X 1" X 14GA / 18GA HAT CHANNEL	5
9A	OPT. END WALL GIRT	2.5" X 1.5" 14GA CHANNEL	1
10	SHEATHING	29 GA CORRUGATED SHEET	8
11	END WALL POST	2.5" X 2.5" X 14GA TUBE	1
12	DOOR POST	2.5" X 2.5" X 14GA TUBE	1
13	SINGLE HEADER	2.5" X 2.5" X 14GA TUBE	1
14	DOUBLE HEADER	DBL. 2.5" X 2.5" X 14GA TUBE	1
15	SERVICE DOOR / WINDOW FRAMING	2.5" X 2.5" X 14GA TUBE	1
16	ANGLE BRACKET	2" X 2" X 2" LG. 14GA ANGLE	7
17	STRAIGHT BRACKET	2" X 2" X 4" LG. 14GA PLATE	6
18	PB SUPPORT	2.5" X 2.5" X 14GA TUBE	1
19	DIAGONAL BRACE	2" X 2" X 14 GA TUBE	3
20	GABLE BRACE	2" X 2" X 14 GA TUBE	3
21	DB BRACKET	2.25" X 2.25" X 6" LG. 14GA ANGLE	9
22	TRUSS SPACER	2.5" X 2.5" X 14GA TUBE	1
23	ALL FASTENERS	#12 X 1" SELF-DRILL SCREWS (ESR-2196 OR EQ) W/ NEOPRENE/STEEL WASHER	

TABLE 2.2: SHEATHING FASTENER SCHEDULE

LOCATION	CORNER PANELS	SIDE LAPS	EDGE LAPS	ELSEWHERE
SPACING	9" C/C	MIN. 1	4½" C/C	9" C/C

FASTENER TYPE: #12X1" SELF-DRILL SCREWS (ESR-2196 OR EQ) W/ NEOPRENE/STEEL WASHER

*SEE TYP. SHEATHING FASTENER SCHEDULE DIAGRAM ON PAGE 6.

TABLE 2.3: GAUGE THICKNESS

GAUGE	29	18	14	12
THICKNESS (IN)	0.0135	0.049	0.083	0.109

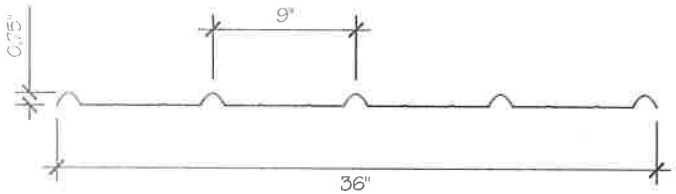

THICKNESS = 29GA

29 GA CORRUGATED SHEATHING (8)

SCALE: NTS

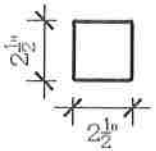

THICKNESS = 14GA

2.5" X 2.5" 14GA TUBE (1)

SCALE: NTS

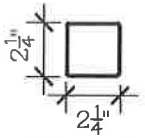

THICKNESS = 12GA

2.25" X 2.25" 12GA TUBE (2)

SCALE: NTS

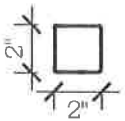

THICKNESS = 14GA

2" X 2" 14GA TUBE (3)

SCALE: NTS

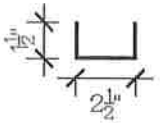

THICKNESS = 14GA

2.5" X 1.5" 14GA CHANNEL (4)

SCALE: NTS

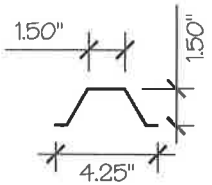

THICKNESS = 14GA / 18GA

4.25" X 1.5" X 14GA / 18GA HAT CHANNEL (5)

SCALE: NTS

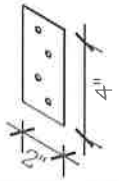

THICKNESS = 14GA

STRAIGHT BRACKET (6)

SCALE: NTS

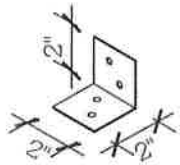

THICKNESS = 14GA

ANGLE BRACKET (7)

SCALE: NTS

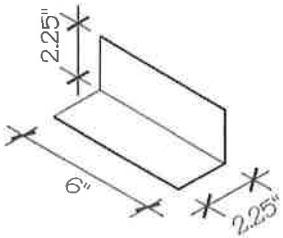

THICKNESS = 14GA

DB BRACKET (9)

SCALE: NTS

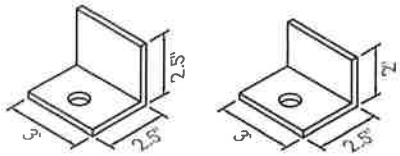

OPTION A
L 2½" X 2½" X 3/16"

OPTION B
L 2½" X 2" X 3/16" SLV

BASE ANGLE (10)

SCALE: NTS

MANUFACTURED BY:

AMERICAN CARPORTS INC

457 N. Broadway,
Joshua, TX 76058
1-866-730-9865

ENGINEERED BY:

A&A ENGINEERING
CIVIL • STRUCTURAL

DRAWING INFORMATION

PROJECT: 18' Wide

LOCATION: STATE OF CALIFORNIA

PROJECT NO.: 233-26-0131

SHEET TITLE:

SCHEDULES & MEMBER SECTIONS

SHEET NO.: 2 / 11

CHECKED BY: OAA DATE: 1/25/24

LEGAL INFORMATION

- ANY DUPLICATION OF THIS DRAWING IN WHOLE OR PART IS STRICTLY FORBIDDEN. ANYONE DOING SO WILL BE PROSECUTED UNDER THE FULL EXTENT OF THE LAW.
- DRAWINGS VALID UP TO 1 YEAR FROM DATE OF ISSUE.

SEAL:

REGISTERED PROFESSIONAL ENGINEER
CIVIL
OMAR A. ABU-YASEIN
C73389
STATE OF CALIFORNIA

STAMP EXPIRY: DEC 31 2026

DATE SIGNED: JAN 20 2026

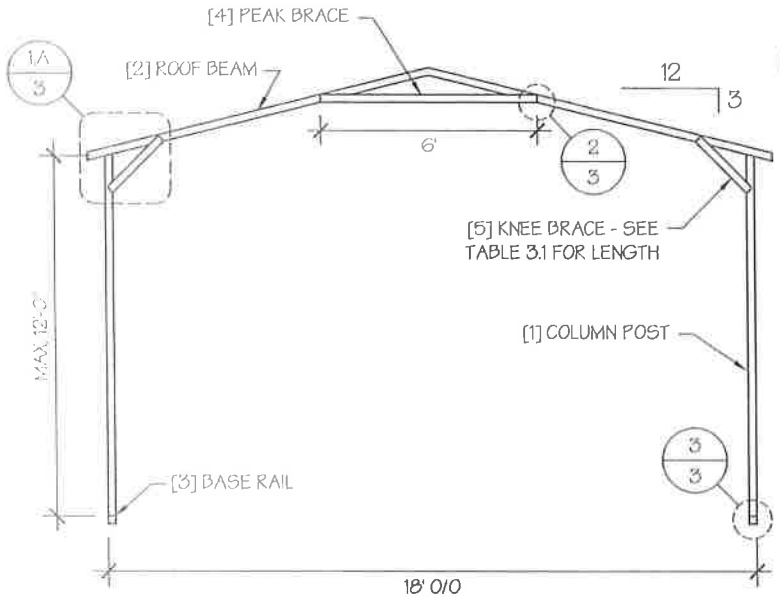

☒ TYP. A-FRAME SECTION
SCALE: NTS

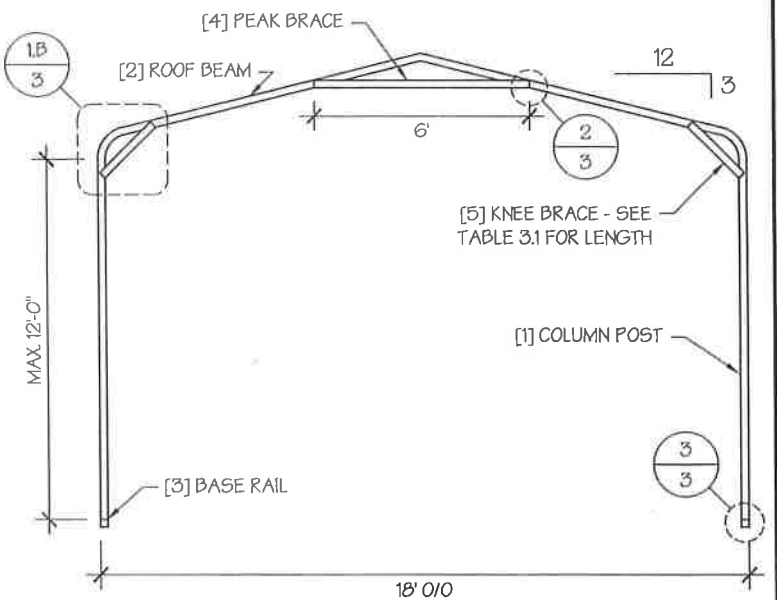

☐ TYP. REGULAR FRAME SECTION
SCALE: NTS

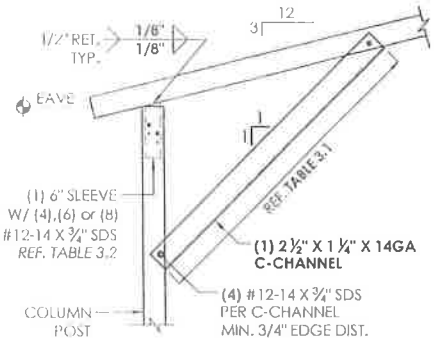

☒ 4 SIDES FULLY ENCLOSED ONLY

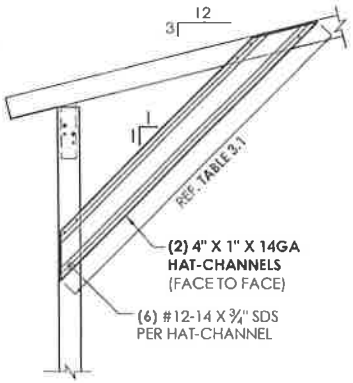

☐ ANY ENCLOSURE

1A A-FRAME (BOXED) STYLE - EAVE DETAIL
SCALE : NTS

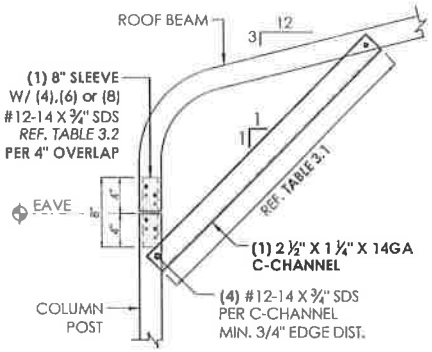

☐ 4 SIDES FULLY ENCLOSED ONLY

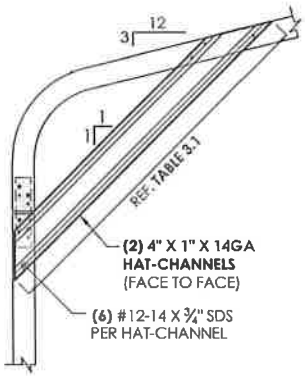

☐ ANY ENCLOSURE

1B REGULAR (BENT-BOW) STYLE - EAVE DETAIL
SCALE : NTS

TABLE 3.1 : KNEE BRACE SCH'D

EAVE HEIGHT	KNEE BRACE LENGTH
☐ UP TO 8'	24"
☒ 8.1' TO 12'	36"

TABLE 3.2 : SLEEVE FASTENER SCH'D

WIND SPEED (MPH)	NO. OF FASTENERS
☒ 105 TO 125	4
☐ 126 TO 155	6
☐ 156 TO 180	8

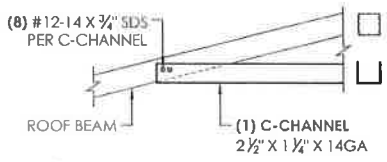

2 PEAK CONN. DETAIL
SCALE : NTS

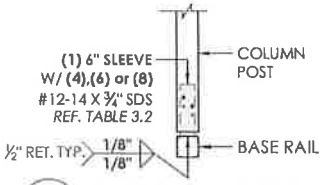

3 BASE CONN. DETAIL
SCALE : NTS

MANUFACTURED BY:

AMERICAN CARPORTS INC

457 N. Broadway,
Joshua, TX 76058
1-866-730-9865

ENGINEERED BY:

A&A ENGINEERING
CIVIL • STRUCTURAL

DRAWING INFORMATION

PROJECT: 18' Wide

LOCATION: STATE OF CALIFORNIA

PROJECT NO.: 233-26-0131

SHEET TITLE:
FRAME SECTIONS & DETAILS

SHEET NO.: 3 / 11

CHECKED BY: OAA DATE: 1/25/24

LEGAL INFORMATION

- ANY DUPLICATION OF THIS DRAWING IN WHOLE OR PART IS STRICTLY FORBIDDEN. ANYONE DOING SO WILL BE PROSECUTED UNDER THE FULL EXTENT OF THE LAW.
- DRAWINGS VALID UP TO 1 YEAR FROM DATE OF ISSUE.

SEAL:

REGISTERED PROFESSIONAL ENGINEER
CIVIL
OMAR A. ABU-YASEIN
C73389
STATE OF CALIFORNIA

STAMP EXPIRY: DEC 31 2026

DATE SIGNED: JAN 20 2026

TABLE 4: FRAME SPACING CHART / SCHEDULE

	GROUND SNOW / ROOF LIVE LOAD (PSF)	☒ ENCLOSED BUILDINGS — WIND SPEED (MPH)							■ OPEN BUILDINGS — WIND SPEED (MPH)						
		☒105	☐115	☐130	☐140	☐155	☐165	☐180	☐105	☐115	☐130	☐140	☐155	☐165	☐180
☒ EAVE HEIGHT = 10'-0" TO 12'-0"	☒30 / 20	60	60	54/60	54	42	36	30	60	54/60	48/60	42/54	36/42	36	30
	☐40 / 27	48/60	48/60	42/60	42/54	42	36	30	48/54	48/54	42/54	42/54	36/42	36	30
	☐50 / 34	40/54	40/54	40/54	40/54	40/42	36	30	40/48	40/48	40/48	40/48	36/42	36	30
	☐60 / 41	36/42	36/42	36/42	36/42	36/42	36	30	36	36	36	36	36	36	30
	☐70 / 47	32/36	32/36	30/36	30/36	30/36	30/36	30	30	30	30	30	30	30	30
	☐80 / 54	30	30	30	30	30	30	30	24	24	24	24	24	24	24
	☐90 / 61	24	24	24	24	24	24	24	18	18	18	18	18	18	18
■ EAVE HEIGHT = 7'-0" TO 9'-0"	☐30 / 20	60	60	54/60	54	48	42/48	42	60	54/60	48/60	42/54	36/48	36/48	36/42
	☐40 / 27	48/60	48/60	42/60	42/54	42/48	42/48	42	48/60	48/60	42/60	42/54	36/48	36/48	36/42
	☐50 / 34	40/54	40/54	40/54	40/54	40/48	40/48	40/42	40/48	40/48	40/48	40/48	36/48	36/48	36/42
	☐60 / 41	36/42	36/42	36/42	36/42	36/42	36/42	36/42	36/42	36/42	36/42	36/42	36/42	36/42	36/42
	☐70 / 47	32/36	32/36	32/36	32/36	32/36	32/36	32/36	32/36	32/36	32/36	32/36	32/36	32/36	32/36
	☐80 / 54	30	30	30	30	30	30	30	30	30	30	30	30	30	30
	☐90 / 61	24	24	24	24	24	24	24	24	24	24	24	24	24	24
■ EAVE HEIGHT = UP TO 6'-0"	☐30 / 20	60	60	54/60	54	48	42/48	42	60	54/60	48/60	42/54	36/48	36/48	36/42
	☐40 / 27	48/60	48/60	42/60	42/54	42/48	42/48	42	48/60	48/60	42/60	42/54	36/48	36/48	36/42
	☐50 / 34	40/54	40/54	40/54	40/54	40/48	40/48	40/42	40/54	40/54	40/54	40/54	36/48	36/48	36/42
	☐60 / 41	36/42	36/42	36/42	36/42	36/42	36/42	36/42	36/42	36/42	36/42	36/42	36/42	36/42	36/42
	☐70 / 47	32/36	32/36	32/36	32/36	32/36	32/36	32/36	32/36	32/36	32/36	32/36	32/36	32/36	32/36
	☐80 / 54	30	30	30	30	30	30	30	30	30	30	30	30	30	30
	☐90 / 61	24	24	24	24	24	24	24	24	24	24	24	24	24	24

NOTES:
1. FRAME SPACINGS ARE IN UNITS OF INCHES (IN).
2. WHERE TWO VALUES ARE SHOWN, THE HIGHER VALUE CAN ONLY BE USED FOR VERTICAL ROOF SHEATHING
3. SNOW LOADS AND ROOF LIVE LOADS ARE IN POUNDS PER SQUARE FOOT (PSF). WIND SPEED IS 3 SEC. GUST IN MILES PER HOUR (MPH).
4. FOR VALUES THAT LIE BETWEEN TWO CELLS, THE HIGHER (MORE STRINGENT) VALUE HAS TO BE USED. INTERPOLATION BETWEEN CELLS IS NOT ALLOWED.

ENCLOSURE CLASSIFICATION:

1. ENCLOSED BUILDING = ALL 4 WALLS FULLY ENCLOSED WITH DOORS/WINDOWS = USE ENCLOSED BUILDING SPACING CHART.
2. OPEN BUILDING = ALL 4 WALLS FULLY OPEN = USE OPEN BUILDING SPACING CHART.
3. 3FT PARTIALLY ENCLOSED = BOTH END-WALLS FULLY OPEN, WITH BOTH SIDE-WALLS ONLY 3FT ENCLOSED = USE OPEN BUILDING SPACING CHART.
4. PARTIALLY ENCLOSED = BOTH END-WALLS FULLY OPEN, WITH BOTH SIDE-WALLS ENCLOSED MORE THAN 3FT = START WITH OPEN BUILDING SPACING CHART AND THEN REDUCE SPACING BY 6".
5. 3 SIDED ENCLOSED = ALL WALLS ARE ENCLOSED EXCEPT FOR 1 END-WALL = START WITH ENCLOSED BUILDING SPACING + THE OPEN END FRAME MUST HAVE EITHER A GABLED END OR HAVE DOUBLED WELDED LEGS.
6. FOR ALL SHEATHING ENCLOSURES NOT LISTED ABOVE, REFER TO SHEET 5 FOR SPACING AND DESIGN REQUIREMENTS.

GENERAL NOTES:

1. THE MAX. BUILDING LENGTH FOR ENCLOSED BUILDINGS IS 50'-0". THIS CAN BE INCREASED BY ADDING A DOUBLE FRAME AT THE CENTER TO BREAK THE LENGTH OF THE BUILDING.
2. BUILDINGS WITH PARTIALLY ENCLOSED END WALLS NEED TO HAVE SIDE WALL BRACING TO SUPPORT THE PARTIALLY ENCLOSED END WALL. (SEE FIGURE A ON SHEET 5).

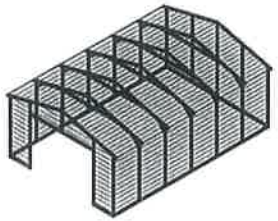

TYP. ENCLOSED BUILDING
SCALE: NTS

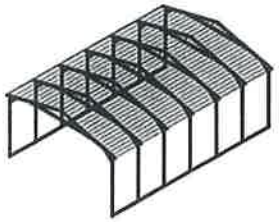

TYP. OPEN BUILDING
SCALE: NTS

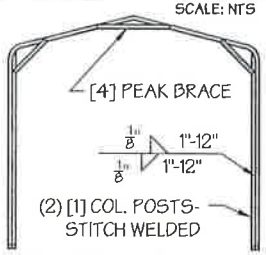

TYP. OPEN END WALL ON 3 SIDE ENCLOSED BUILDING
SCALE: NTS

MANUFACTURED BY:
AMERICAN CARPORTS INC
457 N. Broadway,
Joshua, TX 76058
1-866-730-9865

ENGINEERED BY:
A&A ENGINEERING
CIVIL • STRUCTURAL

DRAWING INFORMATION

PROJECT: 18' Wide
LOCATION: STATE OF CALIFORNIA
PROJECT NO.: 233-26-0131
SHEET TITLE: SPACING SCHEDULES & ENCLOSURE NOTES
SHEET NO.: 4 / 11
CHECKED BY: OAA DATE: 1/25/24

LEGAL INFORMATION

- ANY DUPLICATION OF THIS DRAWING IN WHOLE OR PART IS STRICTLY FORBIDDEN. ANYONE DOING SO WILL BE PROSECUTED UNDER THE FULL EXTENT OF THE LAW.
- DRAWINGS VALID UP TO 1 YEAR FROM DATE OF ISSUE.

SEAL:

REGISTERED PROFESSIONAL ENGINEER
CIVIL
OMAR A. ABU-YASEIN
C73389
STATE OF CALIFORNIA

STAMP EXPIRY: **DEC 31 2026**
DATE SIGNED: **JAN 20 2026**

TABLE 5.1: PURLIN SPACING SCHEDULE

	GROUND SNOW / ROOF LIVE LOAD (PSF)	☒ 14GA. HAT CHANNEL PURLIN — WIND SPEED (MPH)							■ 18GA. HAT CHANNEL PURLIN — WIND SPEED (MPH)						
		☒ 105	□ 115	□ 130	□ 140	□ 155	□ 165	□ 180	□ 105	□ 115	□ 130	□ 140	□ 155	□ 165	□ 180
FRAME SPACING: ☒ 5'-0"	☒ 30 / 20	54	48	42	36	30	24	24	36	30	24	18	18	12	12
	□ 40 / 27	42	42	42	36	30	24	24	30	30	24	18	18	12	12
	□ 50 / 34	40	40	40	36	30	24	24	24	24	24	18	18	12	12
	□ 60 / 41	36	36	36	36	30	24	24	18	18	18	18	18	12	12
	□ 70 / 47	32	32	32	32	30	24	24	18	18	18	18	18	12	12
	□ 80 / 54	30	30	30	30	30	24	24	18	18	18	18	18	12	12
	□ 90 / 61	24	24	24	24	24	24	24	12	12	12	12	12	12	12
FRAME SPACING: ■ 4'-6"	□ 30 / 20	54	48	42	42	36	30	30	48	36	30	24	18	18	12
	□ 40 / 27	42	42	42	42	36	30	30	42	36	30	24	18	18	12
	□ 50 / 34	40	40	40	40	36	30	30	30	30	30	24	18	18	12
	□ 60 / 41	36	36	36	36	36	30	30	30	30	30	24	18	18	12
	□ 70 / 47	32	32	32	32	32	30	30	24	24	24	24	18	18	12
	□ 80 / 54	32	32	32	32	32	30	30	18	18	18	18	18	18	12
	□ 90 / 61	30	30	30	30	30	30	30	18	18	18	18	18	18	12
FRAME SPACING: ■ 4'-0"	□ 30 / 20	54	48	42	42	36	36	30	54	48	36	30	24	24	18
	□ 40 / 27	42	42	42	42	36	36	30	42	42	36	30	24	24	18
	□ 50 / 34	40	40	40	40	36	36	30	40	40	36	30	24	24	18
	□ 60 / 41	36	36	36	36	36	36	30	36	36	36	30	24	24	18
	□ 70 / 47	32	32	32	32	32	32	30	30	30	30	30	24	24	18
	□ 80 / 54	32	32	32	32	32	32	30	24	24	24	24	24	24	18
	□ 90 / 61	30	30	30	30	30	30	30	24	24	24	24	24	24	18
FRAME SPACING: ■ 3'-6"	□ 30 / 20	54	48	42	42	36	36	30	54	48	42	42	36	30	30
	□ 40 / 27	42	42	42	42	36	36	30	42	42	42	42	36	30	30
	□ 50 / 34	40	40	40	40	36	36	30	40	40	40	40	36	30	30
	□ 60 / 41	36	36	36	36	36	36	30	36	36	36	36	36	30	30
	□ 70 / 47	32	32	32	32	32	32	30	32	32	32	32	32	30	30
	□ 80 / 54	32	32	32	32	32	32	30	32	32	32	32	32	30	30
	□ 90 / 61	30	30	30	30	30	30	30	30	30	30	30	30	30	30
FRAME SPACING: ■ 3'-0" OR LOWER	□ 30 / 20	54	48	42	42	36	36	30	54	48	42	42	36	36	30
	□ 40 / 27	42	42	42	42	36	36	30	42	42	42	42	36	36	30
	□ 50 / 34	40	40	40	40	36	36	30	40	40	40	40	36	36	30
	□ 60 / 41	36	36	36	36	36	36	30	36	36	36	36	36	36	30
	□ 70 / 47	32	32	32	32	32	32	30	32	32	32	32	32	32	30
	□ 80 / 54	32	32	32	32	32	32	30	32	32	32	32	32	32	30
	□ 90 / 61	30	30	30	30	30	30	30	30	30	30	30	30	30	30

NOTES:
1. PURLIN SPACING UNITS ARE IN INCHES.
2. FRAME SPACING NEEDS TO BE DETERMINED FROM TABLE 4.

IRREGULAR BUILDING NOTES:
1. FIGURES A, B, C & D ON THE RIGHT INDICATE EXAMPLES OF IRREGULAR BUILDINGS.
2. FOR IRREGULAR BUILDINGS, FRAME SPACING MUST BE REDUCED BY 6" FROM OPEN BUILDING SPACING TABLE. SEE SHEET 4 FOR OPEN BUILDING TABLE.
3. SITE SPECIFICS MAY ALLOW FOR ALTERNATIVE SPACING.

TABLE 5.2: GIRT SPACING SCHEDULE

FRAME SPACING	WIND SPEED (MPH) ■ 105	■ 115	■ 130	■ 140	■ 155	■ 165	■ 180
□ 5'-0"	60	48	36	30	24	24	18
□ 4'-6"	60	60	48	42	36	30	24
□ 4'-0"	60	60	54	54	42	36	30
□ 3'-6"	60	60	54	54	48	42	42
□ 2'-0" TO 3'-0"	60	60	54	54	48	42	42

NOTES:
1. GIRT SPACING UNITS ARE IN INCHES.
2. THIS SCHEDULE IS TO BE USED FOR BOTH 14GA AND 18 GA PURLINS.
3. FRAME SPACING NEEDS TO BE DETERMINED FROM TABLE 4.

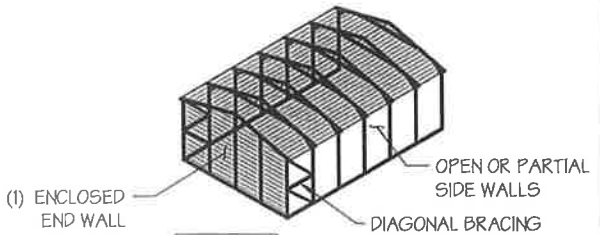

FIGURE A

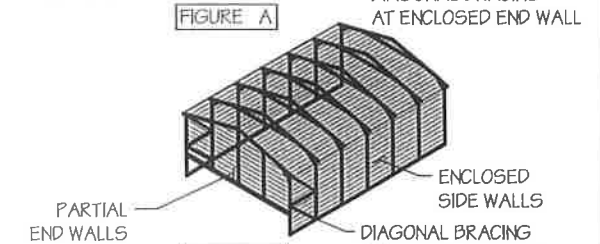

FIGURE B

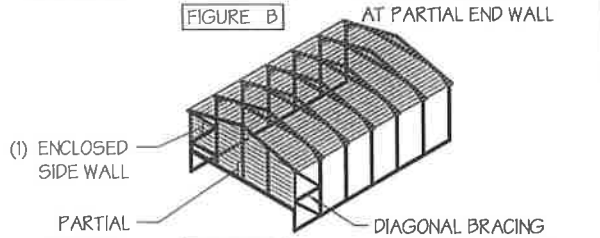

FIGURE C

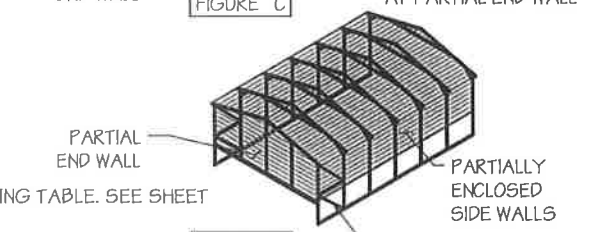

FIGURE D

MANUFACTURED BY:

AMERICAN CARPORTS INC

457 N. Broadway,
Joshua, TX 76058
1-866-730-9865

ENGINEERED BY:

A&A ENGINEERING
CIVIL • STRUCTURAL

DRAWING INFORMATION

PROJECT: 18' Wide
LOCATION: STATE OF CALIFORNIA
PROJECT NO.: 233-26-0131
SHEET TITLE: PURLIN & GIRT SPACING SCHEDULES
SHEET NO.: 5 / 11
CHECKED BY: OAA DATE: 1/25/24

LEGAL INFORMATION

- ANY DUPLICATION OF THIS DRAWING IN WHOLE OR PART IS STRICTLY FORBIDDEN. ANYONE DOING SO WILL BE PROSECUTED UNDER THE FULL EXTENT OF THE LAW.
- DRAWINGS VALID UP TO 1 YEAR FROM DATE OF ISSUE.

SEAL:

REGISTERED PROFESSIONAL ENGINEER
CIVIL
OMAR A. ABU-YASEIN
C73389
STATE OF CALIFORNIA

STAMP EXPIRY: DEC 31 2026
DATE SIGNED: JAN 20 2026

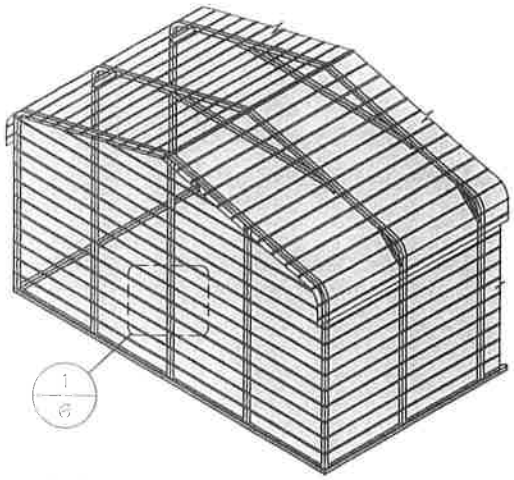

TYP. HORIZONTAL SHEATHING
SCALE: NTS

Sides & Ends Only

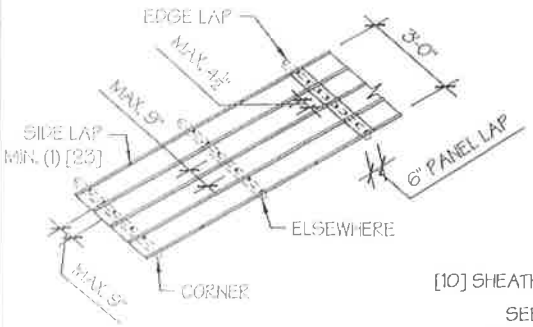

TYP. SHEATHING FASTENER SCHEDULE
SCALE: NTS

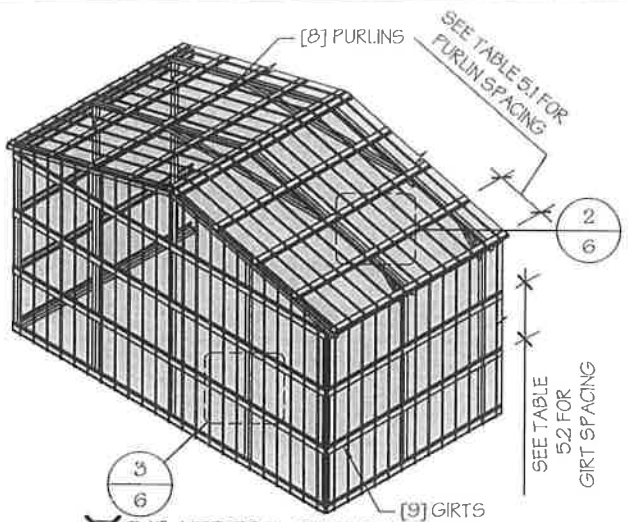

TYP. VERTICAL SHEATHING
SCALE: NTS

Roof Only

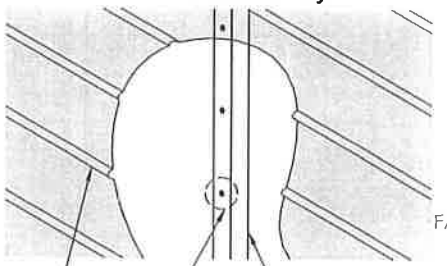

TYP. HORIZONTAL SHEATHING DETAIL 1
SCALE: NTS

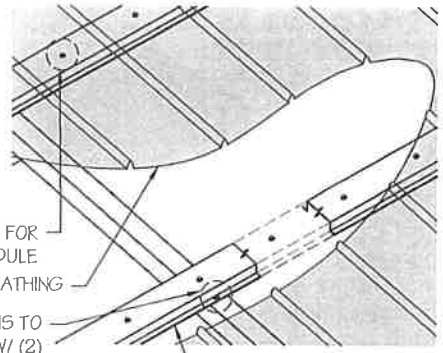

ROOF VERTICAL SHEATHING DETAIL 2
SCALE: NTS

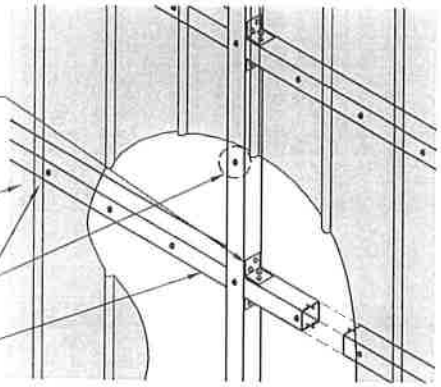

☐ WALL VERTICAL SHEATHING - TUBE DETAIL 3
SCALE: NTS

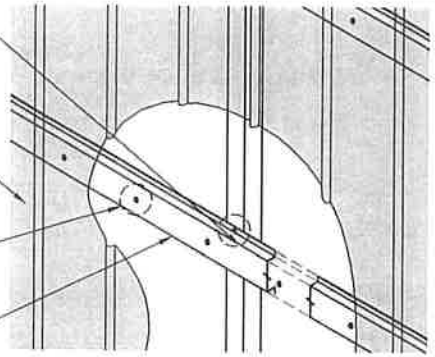

☐ WALL VERTICAL SHEATHING - HAT CHANNEL DETAIL 3
SCALE: NTS

GENERAL SHEATHING NOTES:

1. REGULAR STYLE BUILDINGS CAN ONLY HAVE HORIZONTAL SHEATHING ON ROOF AND WALLS.
2. A-FRAME STYLE BUILDINGS CAN HAVE ANY COMBINATION OF HORIZONTAL OR VERTICAL SHEATHING ON ROOFS AND WALLS.
3. BOTH HORIZONTAL AND VERTICALS ROOF SHEATHING CAN HAVE MAX. 6" OVERHANG.
4. USING VERTICAL SHEATHING MAY ALLOW FOR GREATER FRAME SPACING. SEE NOTE 2 UNDER TABLE 4.
5. VERTICAL SHEATHING RECOMMENDED FOR BUILDINGS 30' OR LONGER

MANUFACTURED BY:
AMERICAN CARPORTS INC
457 N. Broadway,
Joshua, TX 76058
1-866-730-9865

ENGINEERED BY:
A&A ENGINEERING
CIVIL • STRUCTURAL

DRAWING INFORMATION

PROJECT: 18' Wide
LOCATION: STATE OF CALIFORNIA
PROJECT NO.: 233-26-0131
SHEET TITLE: SHEATHING OPTIONS & DETAILS
SHEET NO.: 6 / 11
CHECKED BY: OAA DATE: 1/25/24

LEGAL INFORMATION

- ANY DUPLICATION OF THIS DRAWING IN WHOLE OR PART IS STRICTLY FORBIDDEN. ANYONE DOING SO WILL BE PROSECUTED UNDER THE FULL EXTENT OF THE LAW.
- DRAWINGS VALID UP TO 1 YEAR FROM DATE OF ISSUE.

SEAL:

REGISTERED PROFESSIONAL ENGINEER
CIVIL
OMAR A. ABU-YASEIN
C73389
STATE OF CALIFORNIA

STAMP EXPIRY: DEC 31 2026
DATE SIGNED: JAN 20 2026

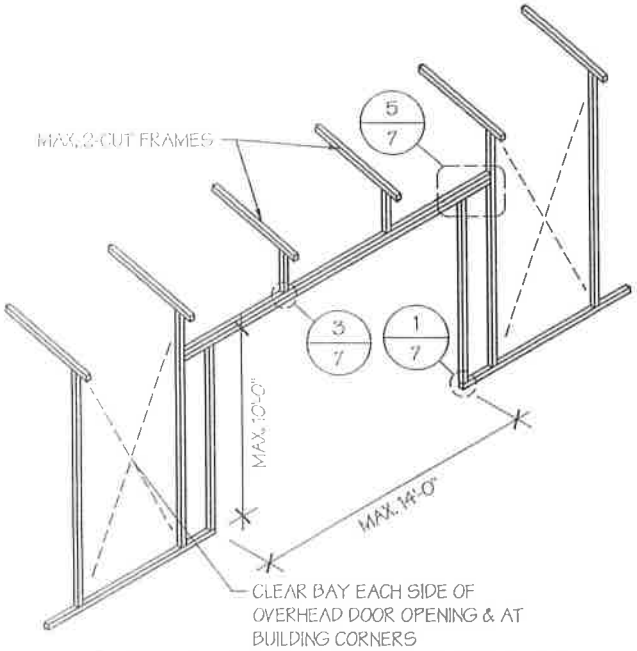

SIDE WALL OVERHEAD DOOR OPENINGS

SCALE: NTS

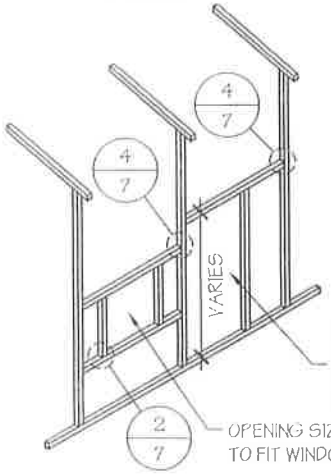

SIDE WALL SERVICE DOOR / WINDOW OPENINGS

SCALE: NTS

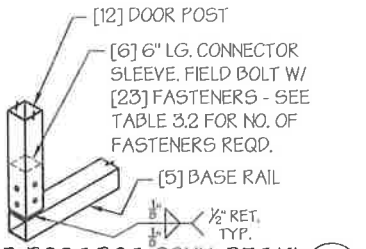

DOOR POST BOT. CONN. DETAIL 1

SCALE: NTS

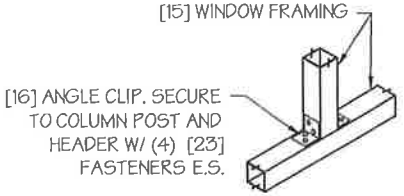

TYP. WINDOW FRAMING CONN. DETAIL 2

SCALE: NTS

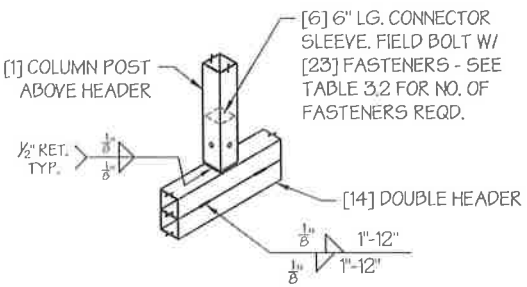

COLUMN POST ABOVE DOOR HEADER CONN. DETAIL 3

SCALE: NTS

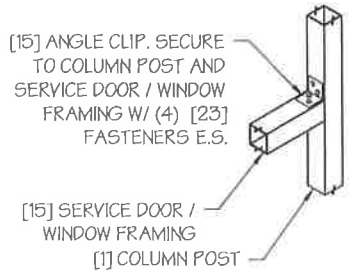

TYP. SERVICE DOOR / WINDOW FRAMING CONN. DETAIL 4

SCALE: NTS

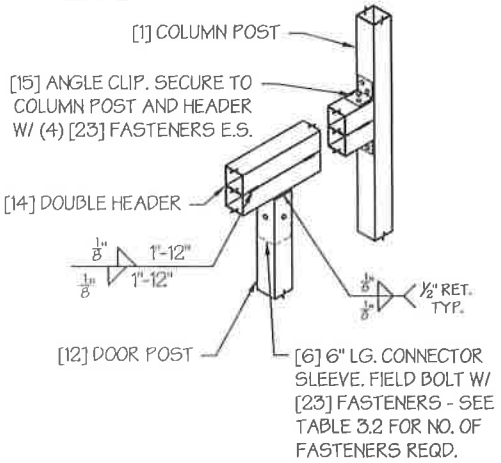

COLUMN POST ABOVE DOOR HEADER CONN. DETAIL 5

SCALE: NTS

SIDE WALL FRAMING NOTES:

1. DESIGNS AND DETAILS SHOWN HERE ARE APPLICABLE TO BOTH REGULAR AND A-FRAME STYLE BUILDINGS.
2. MAX. HEIGHT OF SIDE WALL OVERHEAD DOOR OPENINGS IS 2 FT LESS THAN THE EAVE HEIGHT.
3. OVERHEAD DOOR OPENINGS CANNOT CUT THROUGH MORE THAN 2 FULL FRAMES.
4. MIN. 1 CLEAR BAY MUST BE MAINTAINED BETWEEN ANY 2 OVERHEAD DOOR OPENINGS. A CLEAR BAY IS A SPACE BETWEEN TWO FRAMES THAT HAS NO OVERHEAD DOOR OPENINGS.
5. MIN. 1 CLEAR BAY MUST ALSO BE MAINTAINED FROM THE BUILDING CORNERS.
6. SERVICE DOORS AND WINDOWS CAN BE PLACED IN CLEAR BAYS OR ANY WHERE ELSE AS NEEDED.

MANUFACTURED BY:

AMERICAN CARPORTS INC
457 N. Broadway,
Joshua, TX 76058
1-866-730-9865

ENGINEERED BY:

A&A ENGINEERING
CIVIL · STRUCTURAL

DRAWING INFORMATION

PROJECT: 18' Wide

LOCATION: STATE OF CALIFORNIA

PROJECT NO.: 233-26-0131

SHEET TITLE: SIDE WALL FRAMING & OPENINGS

SHEET NO.: 7 / 11

CHECKED BY: OAA DATE: 1/25/24

LEGAL INFORMATION

- ANY DUPLICATION OF THIS DRAWING IN WHOLE OR PART IS STRICTLY FORBIDDEN. ANYONE DOING SO WILL BE PROSECUTED UNDER THE FULL EXTENT OF THE LAW.
- DRAWINGS VALID UP TO 1 YEAR FROM DATE OF ISSUE.

SEAL:

REGISTERED PROFESSIONAL ENGINEER
CIVIL
OMAR A. ABU-YASEIN
C73389
STATE OF CALIFORNIA

STAMP EXPIRY: DEC 31 2026

DATE SIGNED: JAN 20 2026

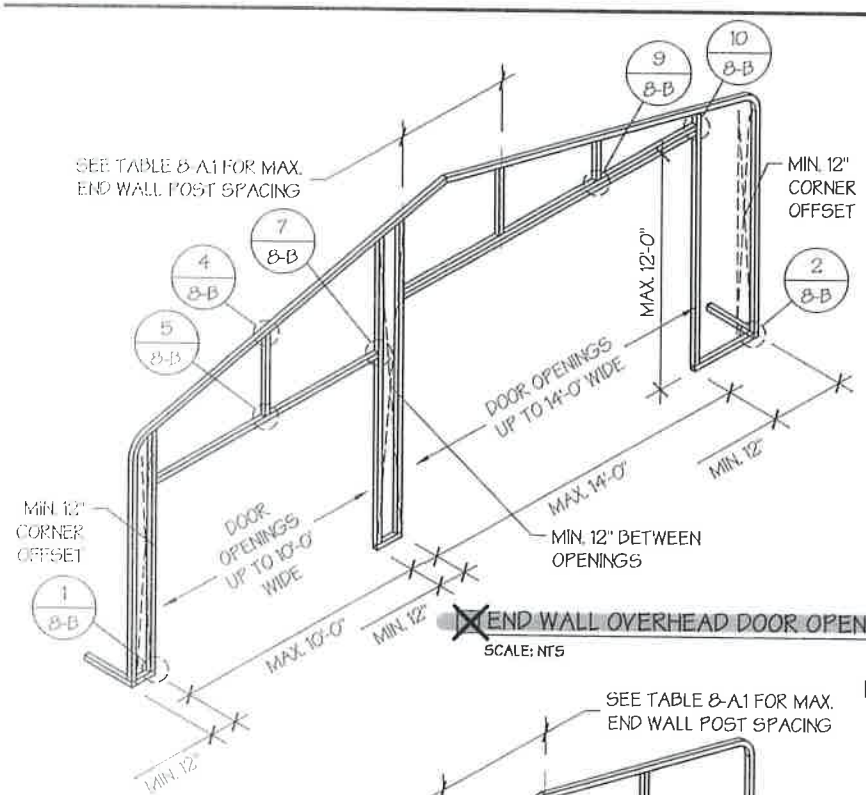

☒ END WALL OVERHEAD DOOR OPENINGS

SCALE: NTS

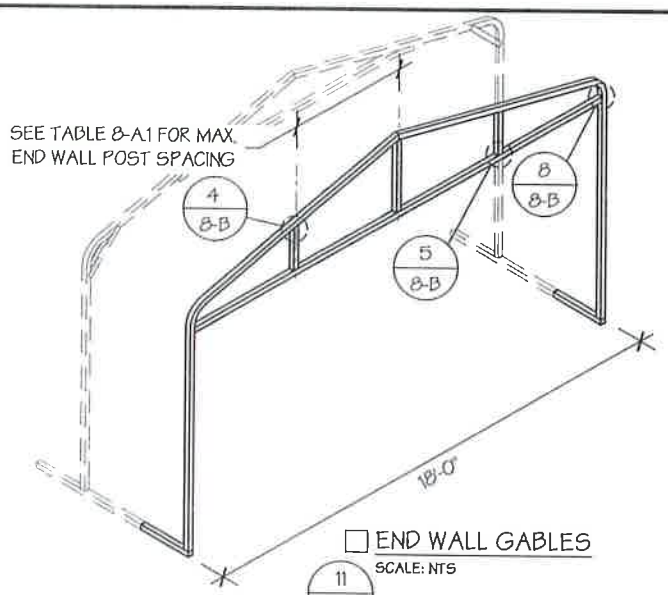

☐ END WALL GABLES

SCALE: NTS

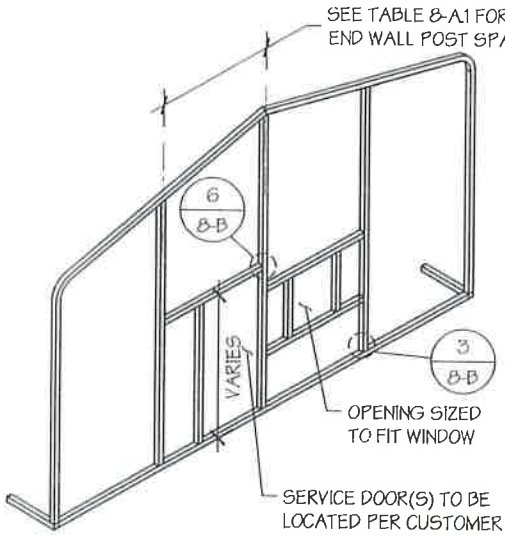

☒ END WALL SERVICE DOOR AND WINDOW OPENINGS

SCALE: NTS

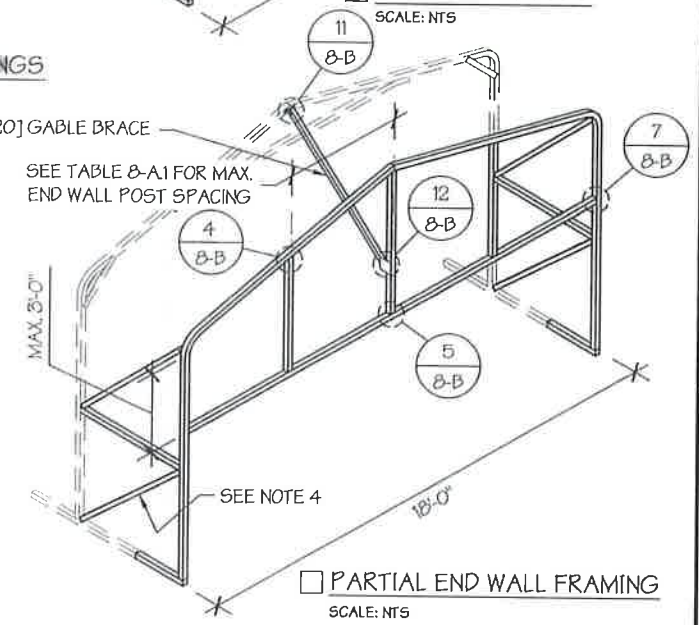

☐ PARTIAL END WALL FRAMING

SCALE: NTS

GABLE BRACING NOTE

1. GABLE BRACE IS ONLY REQUIRED FOR PARTIALLY ENCLOSED END WALLS (END WALL POSTS ARE NOT ANCHORED TO THE GROUND).
2. FULLY ENCLOSED OR OPEN END WALLS DO NOT REQUIRE GABLE BRACING.

END WALL FRAMING NOTES:

1. DESIGNS AND DETAILS SHOWN HERE ARE APPLICABLE TO BOTH REGULAR AND A-FRAME STYLE BUILDINGS.
2. MIN. 12" CLEARANCE MUST BE MAINTAINED BETWEEN ANY TWO OPENINGS (OVERHEAD DOOR OR SERVICE DOOR) AND FROM CORNERS.
3. SERVICE DOORS AND WINDOWS CAN BE PLACED AS NEEDED.
4. DIAGONAL BRACES NEED TO BE ADDED FOR PARTIAL END WALL ENCLOSURES. SEE SHEET 9 FOR DIAGONAL BRACE CONNECTION DETAILS.

TABLE 8-A.1: END WALL POST SPACING SCHEDULE

WIND SPEED (MPH)	EAVE HEIGHT		
	■ UP TO 7'	■ 8' TO 9'	■ 10' TO 12'
~~☐ 105~~	5'	5'	5'
☐ 115	5'	5'	4.5'
☐ 130	4.5'	4.5'	4'
☐ 140	4.5'	4.5'	3'
☐ 155	4'	4'	2.5'
☐ 165 - 180	3.5'	3'	2'

MANUFACTURED BY:
AMERICAN CARPORTS INC
457 N. Broadway,
Joshua, TX 76058
1-866-730-9865

ENGINEERED BY:
A&A ENGINEERING
CIVIL • STRUCTURAL

DRAWING INFORMATION

PROJECT: 18' Wide

LOCATION: STATE OF CALIFORNIA

PROJECT NO.: 233-26-0131

SHEET TITLE: END WALL FRAMING

SHEET NO.: 8-A / 11

CHECKED BY: OAA DATE: 1/25/24

LEGAL INFORMATION

- ANY DUPLICATION OF THIS DRAWING IN WHOLE OR PART IS STRICTLY FORBIDDEN. ANYONE DOING SO WILL BE PROSECUTED UNDER THE FULL EXTENT OF THE LAW.
- DRAWINGS VALID UP TO 1 YEAR FROM DATE OF ISSUE.

SEAL:

REGISTERED PROFESSIONAL ENGINEER
CIVIL
OMAR A. ABU-YASEIN
C73389
STATE OF CALIFORNIA

STAMP EXPIRY: DEC 31 2026

DATE SIGNED: JAN 20 2026

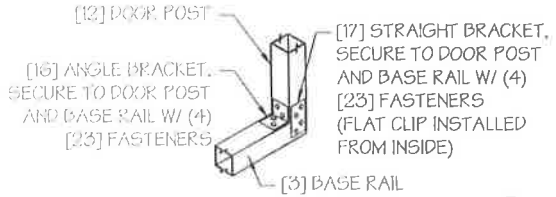

DOOR POST BASE RAIL CONN. DETAIL 1
SCALE: NTS

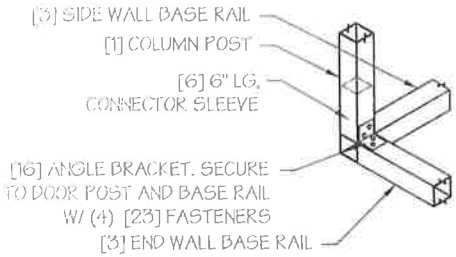

CORNER DETAIL 2
SCALE: NTS

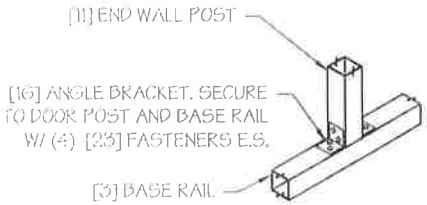

END WALL POST - BASE RAIL CONN. DETAIL 3
SCALE: NTS

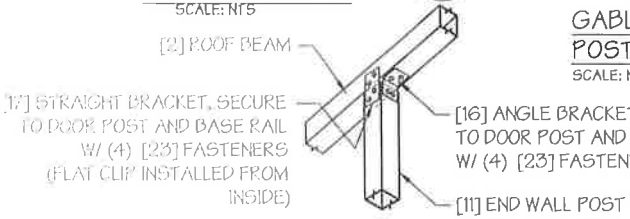

END WALL POST - ROOF BEAM CONN. DETAIL 4
SCALE: NTS

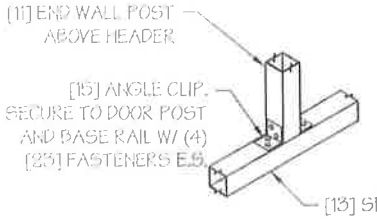

END WALL POST ABOVE HEADER CONN. DETAIL 5
SCALE: NTS

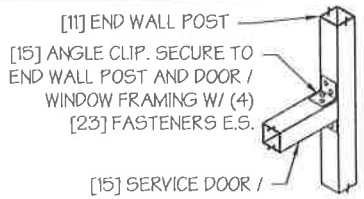

TYP. SERVICE DOOR / WINDOW FRAMING CONN. DETAIL 6
SCALE: NTS

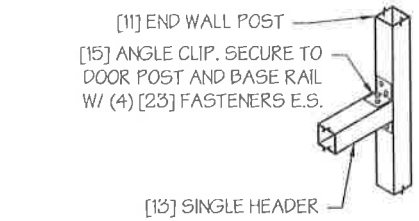

HEADER - END WALL POST CONN. DETAIL 7
SCALE: NTS

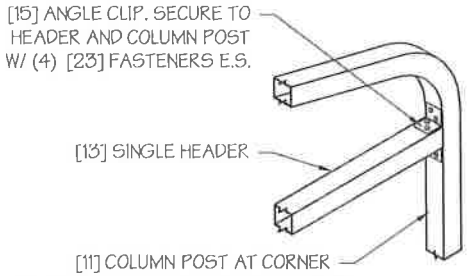

GABLE HEADER - CORNER POST CONN. DETAIL 8
SCALE: NTS

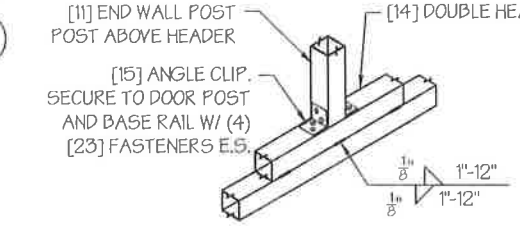

END WALL POST ABOVE DOUBLE HEADER CONN. DETAIL 9
SCALE: NTS

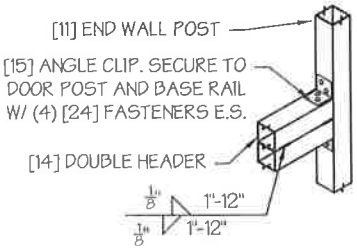

DOUBLE HEADER - END WALL POST CONN. DETAIL 10
SCALE: NTS

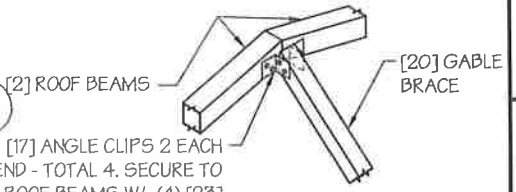

TYP. GABLE BRACE CONN. DETAIL 11
SCALE: NTS

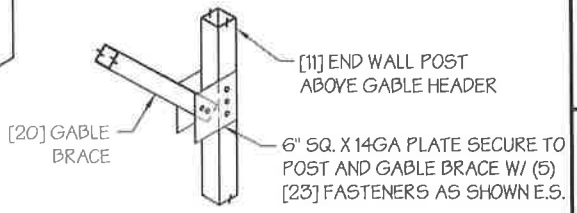

GABLE BRACE - END WALL CONN. DETAIL 12
SCALE: NTS

GABLE BRACING NOTE

1. GABLE BRACE IS ONLY REQUIRED FOR PARTIALLY ENCLOSED END WALLS (END WALL POSTS ARE NOT ANCHORED TO THE GROUND).
2. FULLY ENCLOSED OR OPEN END WALLS DO NOT REQUIRE GABLE BRACING.

MANUFACTURED BY:

AMERICAN CARPORTS INC

457 N. Broadway,
Joshua, TX 76058
1-866-730-9865

ENGINEERED BY:

A&A ENGINEERING
CIVIL • STRUCTURAL

DRAWING INFORMATION

PROJECT: 18' Wide
LOCATION: STATE OF CALIFORNIA
PROJECT NO.: 233-26-0131
SHEET TITLE: END WALL FRAMING DETAILS
SHEET NO.: 8-B / 11
CHECKED BY: OAA DATE: 1/25/24

LEGAL INFORMATION

- ANY DUPLICATION OF THIS DRAWING IN WHOLE OR PART IS STRICTLY FORBIDDEN. ANYONE DOING SO WILL BE PROSECUTED UNDER THE FULL EXTENT OF THE LAW.
- DRAWINGS VALID UP TO 1 YEAR FROM DATE OF ISSUE.

SEAL:

REGISTERED PROFESSIONAL ENGINEER
CIVIL
OMAR A. ABU-YASEIN
C73389
STATE OF CALIFORNIA

STAMP EXPIRY: DEC 31 2026
DATE SIGNED: JAN 20 2026

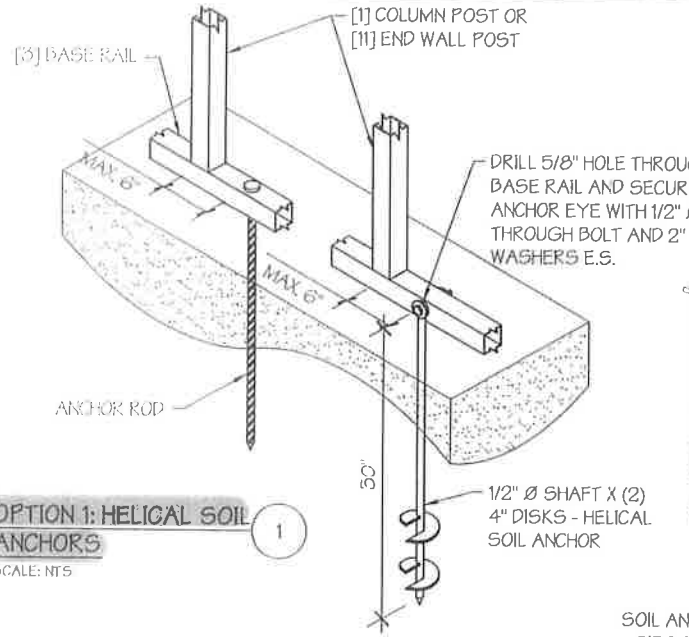

OPTION 1: HELICAL SOIL ANCHORS (1)

SCALE: NTS

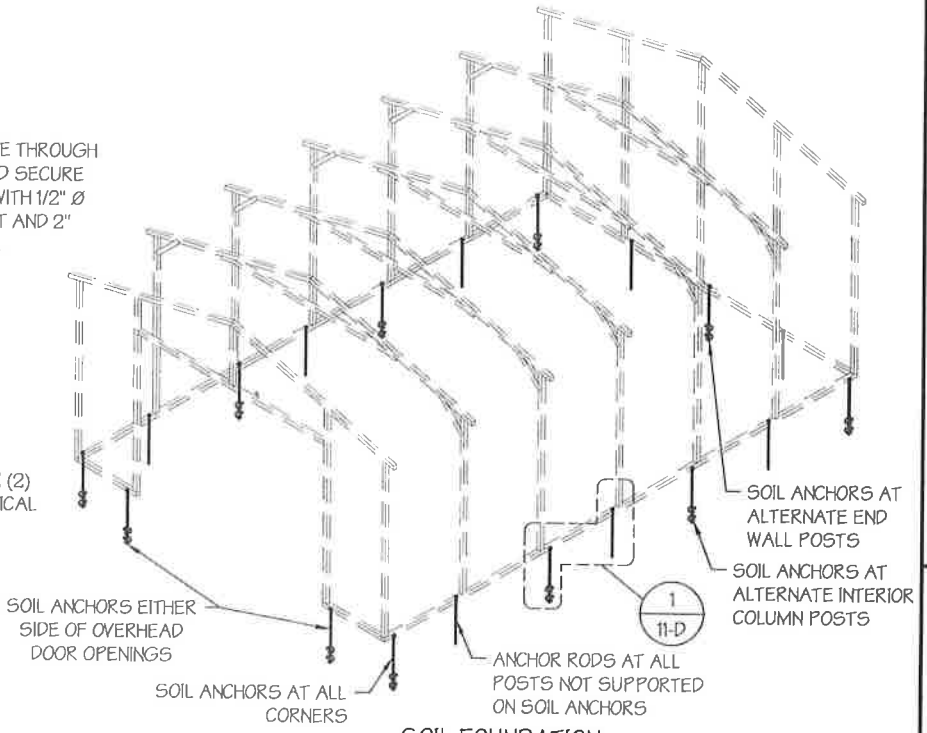

SOIL FOUNDATION

SCALE: NTS

SOIL FOUNDATION NOTES:

1. DESIGNS SHOWN ON THIS SHEET ARE FOR SOIL ANCHOR FOUNDATION.
2. SOIL ANCHORS (HELICAL OR ROCK/ASPHALT) SHALL BE LOCATED AT ALL 4 CORNERS, ON EACH SIDE OF OVERHEAD DOOR OPENINGS, ON POSTS WITH DIAGONAL BRACING IF REQUIRED, AND ON ALTERNATE INTERIOR COLUMN POSTS AND END WALLS POSTS.
3. HELICAL ANCHORS ARE TO BE USED ONLY IF THE DRIVING TORQUE INTO THE GROUND IS 150 FT-LBS OR GREATER. MANUFACTURER IS NOT RESPONSIBLE FOR SOIL QUALITY AT SITE.
4. HELICAL ANCHORS CAN ONLY BE USED FOR CLASS 2, 3 & 4 SOILS (SEE SOIL CLASSIFICATIONS THIS PAGE).
5. ALL POSTS WITH NO ANCHORS ADJACENT SHALL BE ANCHORED TO THE GROUND WITH A 1/2" X 30" LG. ROD. RODS WILL HAVE A PRE-FORMED HEAD AT THE TOP AND ONE COAT OF RUST PROOF MATERIAL.
6. ASSUMED SOIL BEARING CAPACITY IS TO BE A MIN. OF 1500 PSF.

SOIL CLASSIFICATIONS:

SOIL CLASS	DESCRIPTION
2	SANDY GRAVEL AND GRAVEL, VERY THIN DENSE AND/OR CEMENTED SANDS, COARSE GRAVEL/COBBLES, PRELOADED SILTS, CLAYS AND CORAL.
3	SAND, SILTY SAND, CLAYEY SAND, SILTY GRAVEL, MEDIUM DENSE COARSE SANDS, SANDY GRAVEL, VERY STIFF SILT AND SANDY CLAYS.
4	LOOSE TO MEDIUM DENSE SANDS, FIRM TO STIFF CLAYS AND SILTS AND ALLUVIAL FILLS.

*FROM HUD *"MODEL MANUFACTURED HOME INSTALLATION STANDARDS"*

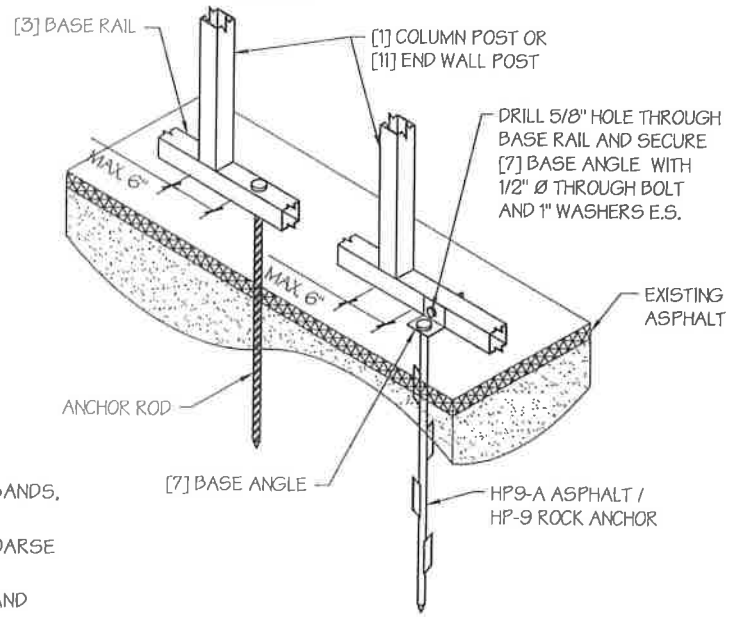

OPTION 2: ROCK / ASPHALT ANCHORS (1)

SCALE: NTS

MANUFACTURED BY:

AMERICAN CARPORTS INC

457 N. Broadway,
Joshua, TX 76058
1-866-730-9865

ENGINEERED BY:

A&A ENGINEERING
CIVIL • STRUCTURAL

DRAWING INFORMATION

PROJECT: 18' Wide

LOCATION: STATE OF CALIFORNIA

PROJECT NO.: 233-26-0131

SHEET TITLE:

FOUNDATION OPTION 4: SOIL ANCHORS

SHEET NO.: 11-D / 11

CHECKED BY: OAA DATE: 1/25/24

LEGAL INFORMATION

- ANY DUPLICATION OF THIS DRAWING IN WHOLE OR PART IS STRICTLY FORBIDDEN. ANYONE DOING SO WILL BE PROSECUTED UNDER THE FULL EXTENT OF THE LAW.
- DRAWINGS VALID UP TO 1 YEAR FROM DATE OF ISSUE.

SEAL:

REGISTERED PROFESSIONAL ENGINEER
CIVIL
OMAR A. ABU-YASEIN
C73389
STATE OF CALIFORNIA

STAMP EXPIRY: DEC 31 2026

DATE SIGNED: JAN 20 2026

BUILDING VIEW

18' Wide * 35' Long * 11' Tall

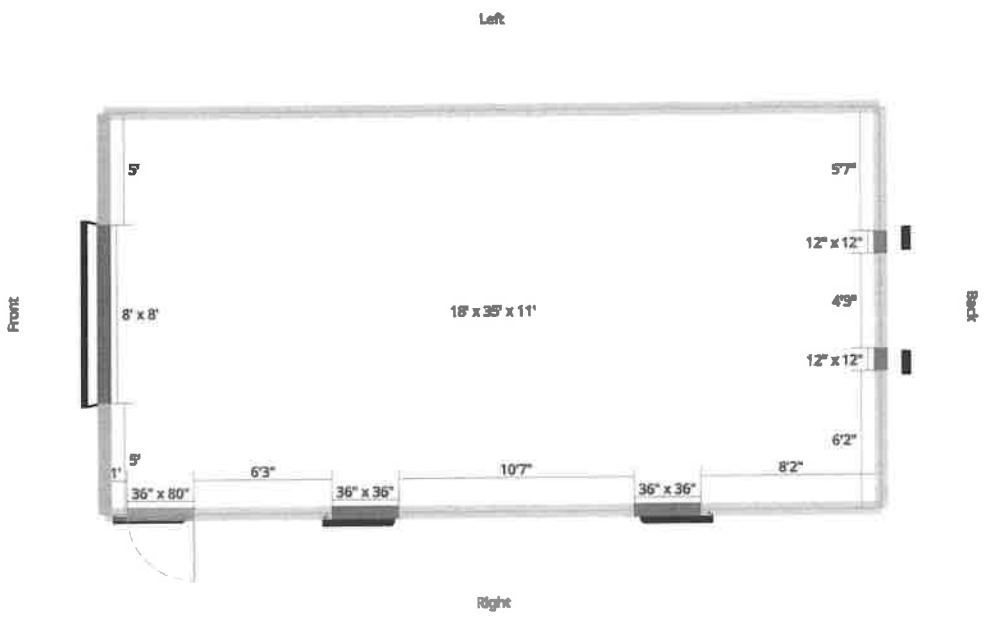

LEGENDS

Garage Door | Garage Door Frameout | Walk in Door | Walk in Door Frameout
Windows | Windows Frameout | Open Wall | Close Wall
Distance | Storage Length (Utility) | Cupola

2D LAYOUT

BUILDING VIEW

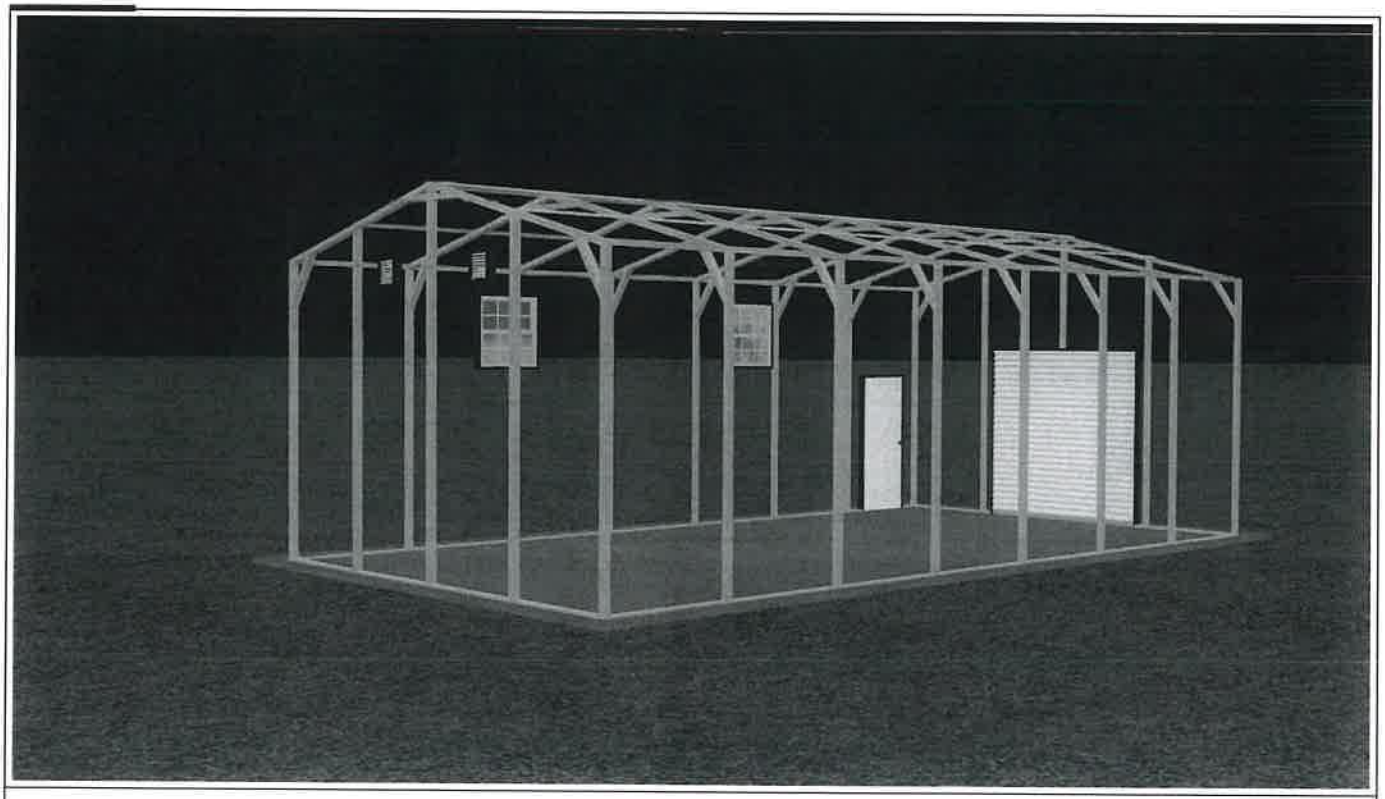

IMAGE 5

BUILDING VIEW

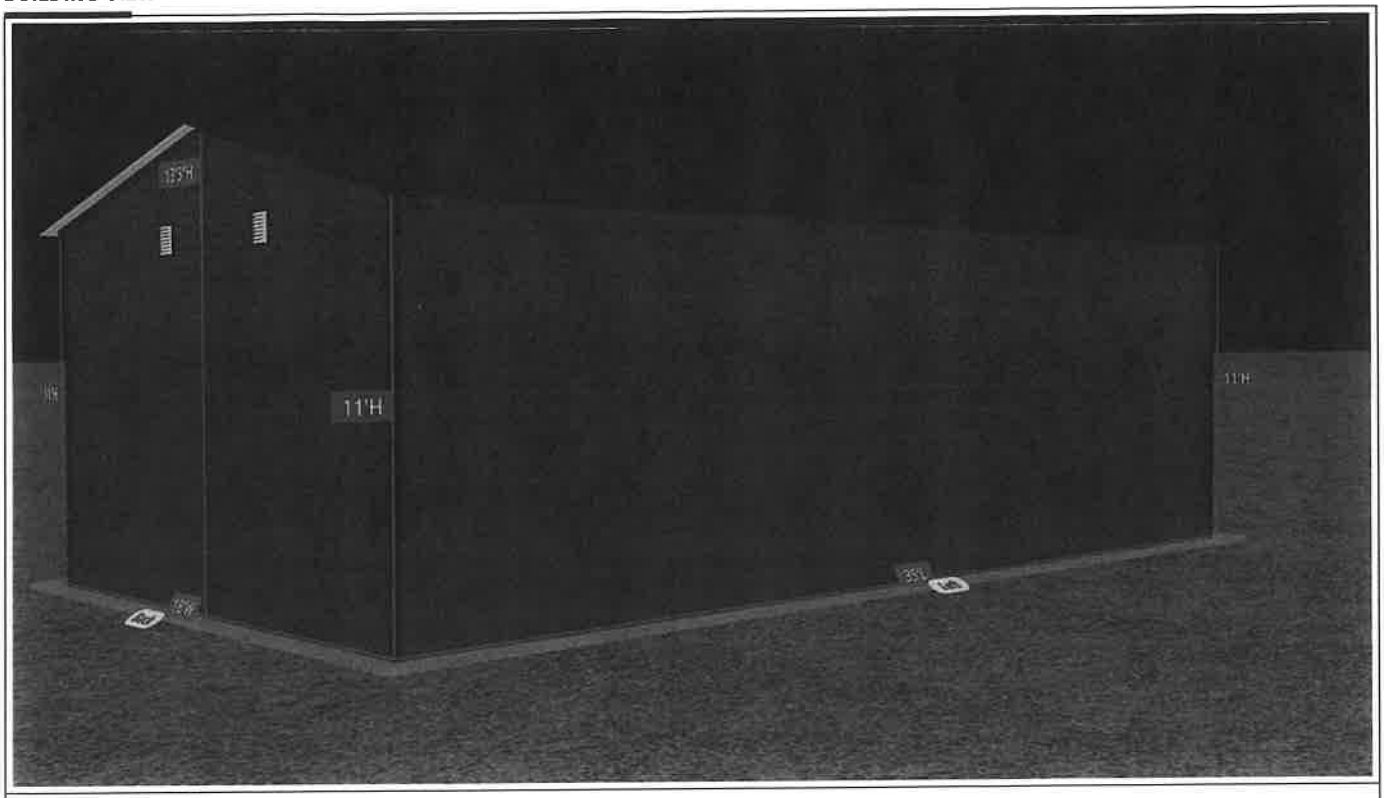

IMAGE 4

BUILDING VIEW

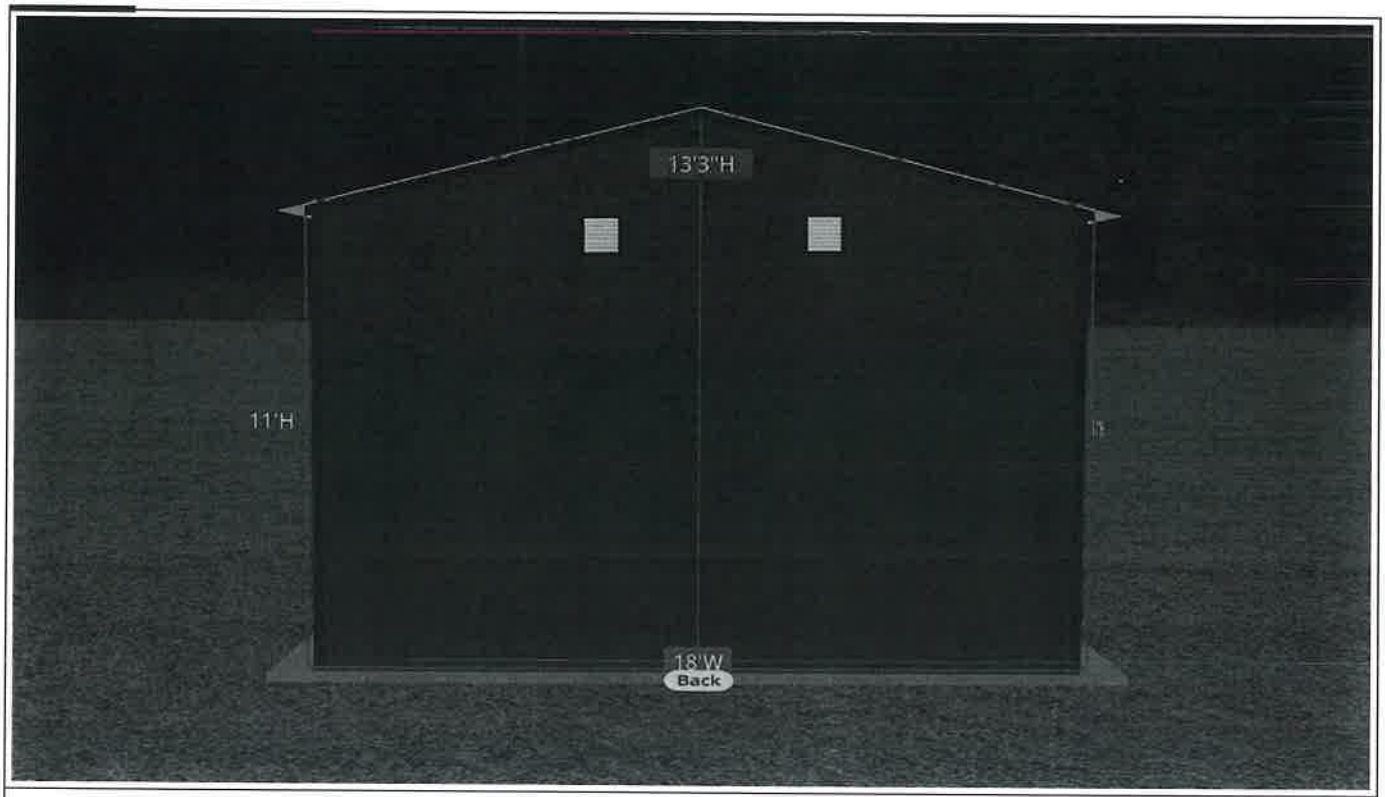

IMAGE 3

BUILDING VIEW



IMAGE 2

BUILDING VIEW

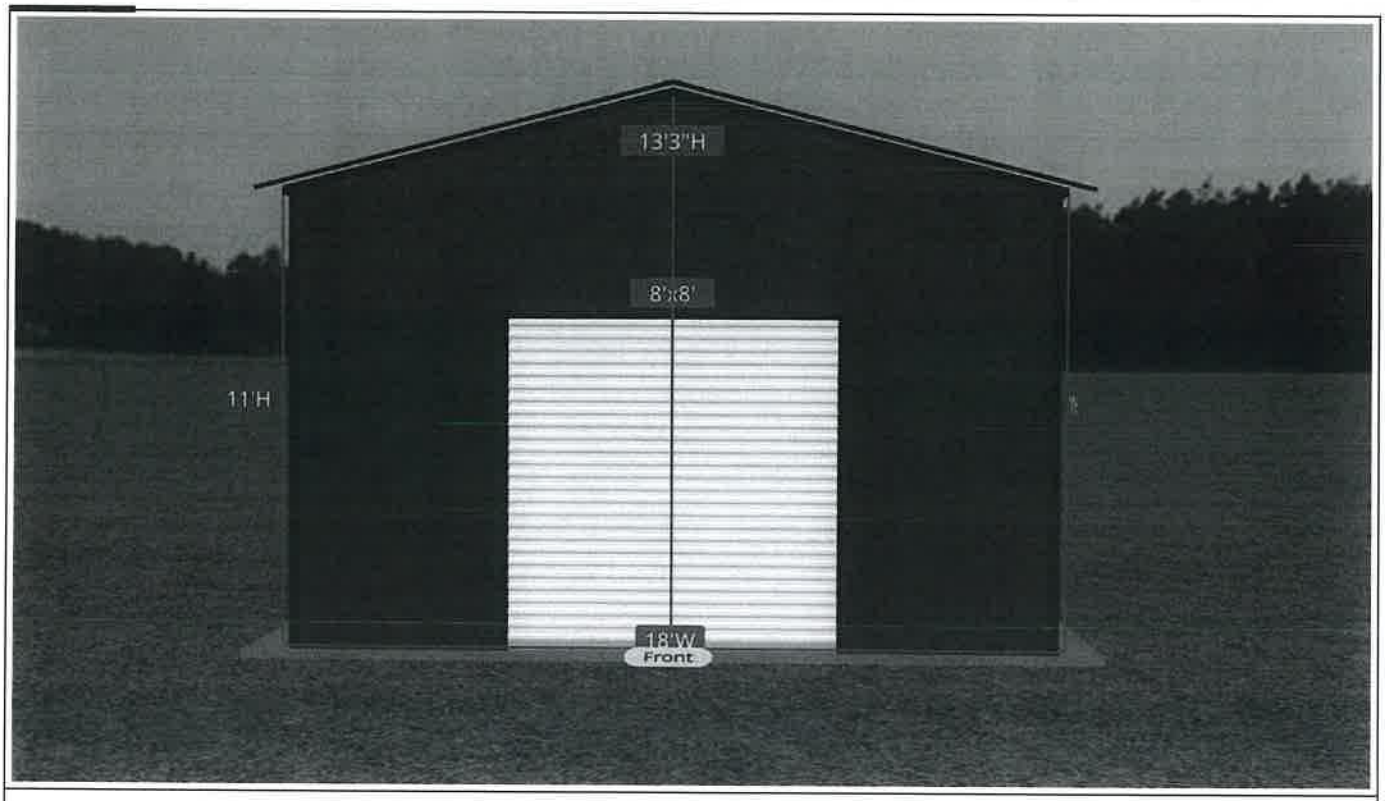

IMAGE 1

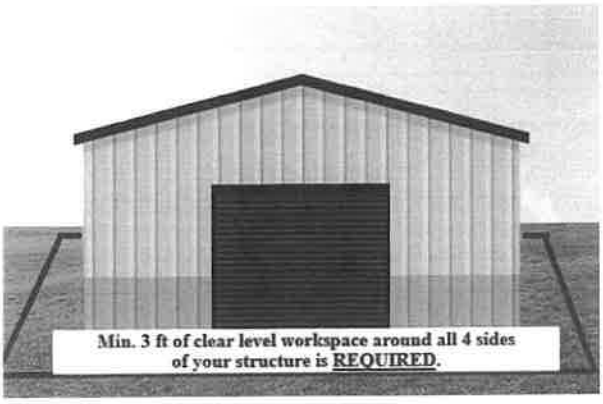

Workspace is 3 Feet Minimum on all 4 sides.

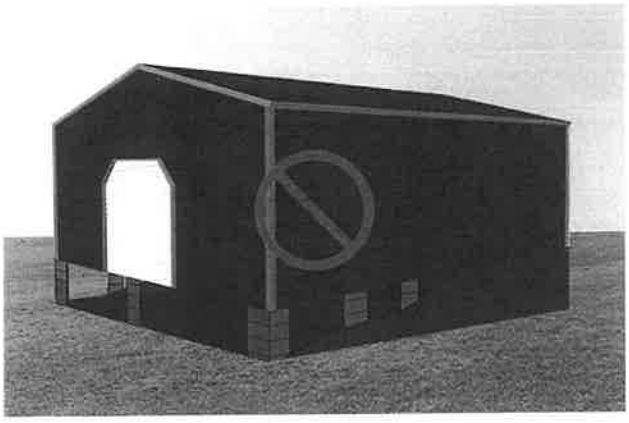

No Installs on Unlevel Land unless it is specifically stated in order with a "Cut legs on site" fee or specifically mentions the slope in the order.

SLAB MUST BE FLAT, LEVEL & SQUARE

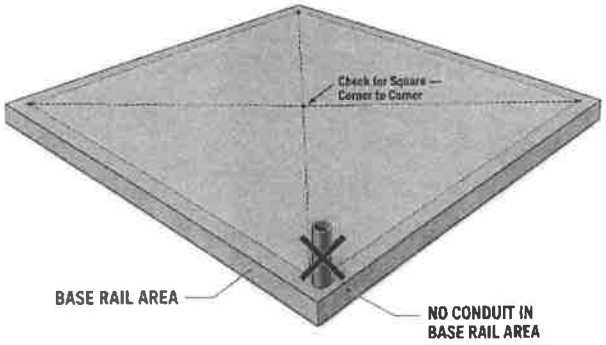

SLAB REQUIREMENTS: Slab must be level, square, and built according to engineering plans. NO stem walls/curbs . Confirm proper conduit with your rep. Nothing can be placed within the base rail area.

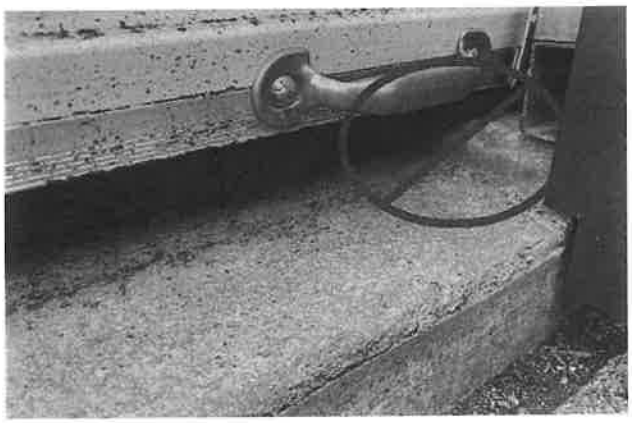

DO NOT create Rollup Door Notches or Slopes without first confirming the correct dimensions with a team member. Each rollup door has side tracks that must be properly accounted for. We will not be held responsible if the door fails to close due to incorrect measurements.

By signing, the Buyer confirms the site will meet all conditions listed above at the time of installation. If the crew is unable to start or complete installation due to any condition listed above, a $350 rescheduling fee will apply and must be paid before a new installation date can be accepted.

Thank you for your understanding — we truly appreciate your business.

Levelled Land Agreement

IMPORTANT CONCRETE NOTES

- **CONCRETE CONTRACTOR:** If using your own contractor, please have them contact our office with any questions before the day work begins. Same-day requests for dimensions, door locations, notches, etc. may cause delays. Only the representative who opened your order can confirm project-specific concrete details.

- **DOOR NOTCH: Rollup Door Notches or Slopes** without first verifying the correct dimensions with a team member. Rollup doors have side tracks that must be properly accounted for.

- **CONDUIT/PLUMBING:** If stubbing electrical or plumbing through the slab,**confirm the location with your representative first.** Conduit cannot pass through the building's 2.5" base rail. When submitting your concrete completion photo, you will be asked for the distance from the conduit to the nearest building corner to ensure it does not interfere with welded anchor brackets.

IMPORTANT CONCRETE NOTES

- The site must be **leveled prior to scheduling an installation day.** To avoid delays or additional charges, please double check this before accepting a start date.

- A minimum of **3 feet of clear, level working space** is required on all four sides of the structure, whether open or enclosed.

- **Obstructions Within Building Footprint:** All items (trailers, vehicles & equipment) must be removed unless a "Build Over Fee" is specifically listed on your order. Verbal discussions do not qualify. Without this noted, proper precautions and signed liability releases are required before installation can begin. If the crew arrives to an unplanned vehicle obstruction, the customer will be subject to a rescheduling fee.

- **Poor site access** for delivery or equipment. The crew will arrive driving a 1-Ton 3500 diesel pick-up truck(likely a dually) towing a 31' dual axel trailer . The must be able to park within 100' of the building site.

- **Material carry over 100 feet** - let your rep know so crew can plan accordingly If you expect any site challenges, please contact your **Ideal Steel Buildings representative** so we can review and include the details in your contract.

March 5, 2026

Owner:
Chico Country Day School
102 W 11th Street
Chico, CA 95928

RE: **Feasibility Study**
New Campus Expansion

Dear Stuart,

Thank you for the opportunity to assist you with your project. Russell Gallaway Associates ("RGA") offers the following proposal for services to Chico Country Day School ("Owner") for the above-referenced project.

PROJECT DESCRIPTION

RGA understands the Project to consist of the expansion of the existing Chico Country Day School campus on a piece of property owned by the school, located at 1030 Broadway Street, Chico, CA 95928.

SCOPE OF SERVICES

Based upon preliminary discussions with the Owner and the information currently available, RGA proposes to provide the following Scope of Services for the Project. The services described herein are intended to support evaluation and advancement of the proposed campus expansion. The listed activities may proceed concurrently and are subject to refinement as additional project information becomes available. As the Project parameters are further defined, RGA will coordinate with the Owner to confirm the scope, establish an appropriate project strategy, and define the final deliverables by mutual agreement.

Part 1 - Feasibility Study

1.01 Prepare feasibility study documents to assess opportunities and challenges associated with campus expansion. Services include:

.01 Transportation and Site Circulation Analysis

a. Analyze current and future transportation flow with respect to student drop-offs and pick-ups, parking, service access, and overall site circulation.

.02 Site Conditions and Constraints

a. Evaluate zoning considerations, land use and design guidelines, regulatory or permitting impacts associated with campus expansion.

.03 Code Analysis

a. Evaluate building code implications and analyze existing and code-required conditions. Facilitate discussions with Authorities Having Jurisdiction as required.

.04 Deliverables include:

a. Conceptual Site Plan

b. Municipal Code and Building Code Summary and Analysis

1.02 Coordinate communications with Owner, and provide periodic progress updates. RGA will submit feasibility documents at appropriate intervals for Owner review. RGA may rely on Owner approvals to proceed with subsequent work.

RGA proposes to complete the above Scope of Services on the following fee basis, billed in accordance with the attached schedule of rates and reimbursables.

Part 1 Feasibility Study Hourly Not to Exceed $10,000 (Ten Thousand Dollars)

ASSUMPTIONS

This proposal is based on the following assumptions.

1. The services provided under this proposal are conceptual and intended for planning/decision-making purposes only and do not include engineering design such as grading, drainage, or utility design.
2. Owner shall provide a plot plan depicting building placement, property lines, and applicable easements in CAD format. If such a plan cannot be provided, RGA will prepare feasibility documents and conceptual site plans based on publicly-accessible Assessor's Parcel Maps. RGA shall not be held liable for the accuracy of the content of, or any derivative design documents created based on, said Assessor's Parcel Maps. Prior to beginning additional design work in future phases of this project, a plot plan of the project site shall be generated in CAD format by the Civil Engineer selected for the project.
3. RGA may rely on information provided by the Owner and Owner's consultants (including surveys, reports, prior studies, and site information). RGA is not responsible for the accuracy, completeness, or timelines of such information. If RGA becomes aware of a material conflict, error, or omission in the information provided, RGA will promptly notify the Owner.
4. Owner will provide (a) available site and facility information needed for feasibility (including any prior studies, reports, surveys, and entitlement information), (b) access to the property as needed for site observation, and (c) the program/operational goals needed to evaluate options. If a boundary/topographic survey, geotechnical report, or environmental documentation is required for feasibility conclusions or future phases, Owner will retain those services as required.
5. Owner will review and respond to RGA submittals within a reasonable time. Delays in Owner decisions or approvals may require schedule and fee adjustments.
6. RGA is not responsible for means and methods of demolition or construction.
7. Prevailing wage is not applicable to professional services firms.

8. Certified payroll is not applicable to professional services firms.
9. Bonding is not applicable to professional services firms.
10. This project is not pursuing CalGreen, LEED, or CHPS design/certification.

EXCLUSIONS

The following items are not included in the above Scope of Services. Additional services not included in the above Scope of Services, if required, will be billed per the attached Schedule of Rates and Reimbursables.

1. Any item not specifically noted as included in the Scope of Services.
2. Submittal fees.
3. Permit, plan check, testing or any agency fees.
4. Furniture design, specifications, or purchasing.
5. Equipment payback, equipment cost comparisons, life cycle cost analysis, construction cost estimates, and bidding of the project.
6. CEQA documents.
7. Environmental/EIR or biological services.
8. Hazardous materials studies
9. RGA is not required to identify environmental requirements, provide a cultural factor assessment, provide a historic resource inventory, or provide any existing building evaluations for the project.
10. Extra service items to be billed on an hourly basis include, but are not limited to the following:
    - Payment of any fees
    - Preparation of documents for bid alternatives
11. In the event RGA's fee schedule changes due to any increase of costs such as the granting of wage increase and/or other employee benefits due to the terms of any labor agreement, or rise in the cost of living, during the lifetime of this Agreement, a percentage increase shall be applied to all remaining compensation.
12. If any of the following circumstances affect RGA's services for the Project, RGA may, at the Owner's reasonable discretion, be entitled to an appropriate adjustment in RGA's schedule and compensation.

    .01 Change in the instructions or approvals given by the Owner that necessitate revisions in Instruments of Service.
    .02 Enactment of revisions of codes, laws or regulations or official interpretations which necessitate changes to previously prepared Instruments of Service.
    .03 Decision of the Owner not rendered in a timely manner.
    .04 Changes in the Project including, but not limited to, size, quality, complexity, the Owner's schedule or budget or procurement method.
    .05 Failure of performance on the part of the Owner or the Owner's consultants or contractors.
    .06 Preparation for an attendance at a public hearing, at the request of the Owner, or in the Owner's behalf, a dispute resolution proceeding or a legal proceeding except where RGA is party thereto unless otherwise included in Scope of Services.

Statements for services of RGA will be submitted on a monthly basis. Statements will be mailed to the address provided by the Owner and will be immediately due and payable. Payment is Net Due thirty days from invoice date. If payment is not so made, interest will be due on the amount of the statement at the rate of 18 percent per annum beginning thirty (30) days after the date of the statement until the same is paid. Compensation for RGA's services shall not be contingent upon Owner's ability to collect from others.

It would be unfair for RGA to be exposed to liability for their failure to perform a service not included in the scope of work described in this agreement. Owner hereby waives any claim against RGA and agrees to defend, indemnify and hold harmless RGA from any claim or liability for injury or loss allegedly arising from RGA's failure to perform a service not included in the scope of the work described in this agreement; including but not limited to any claims against landowner, developer, or Construction Manager.

Due to scheduling issues, RGA reserves the right to withdraw or modify this proposal if it is not accepted within 30 days. If you have any questions, or require any additional information please give us a call at (530) 342-0302. Thank you for considering Russell, Gallaway Associates, Inc. for your design needs.

Best Regards,

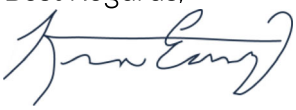

Kevin Easterling
Lic. No. C37351

Accepted By:

Stuart Langford
Chico Country Day School

2026 RGA SCHEDULE OF RATES and REIMBURSABLES

Hourly Rates

Managing Principal Architect, Engineer, CASp	$260.00/hr
Principal Architect, Engineer	$210.00/hr
Senior Architect, Engineer	$190.00/hr
Licensed Architect, Engineer, CASp / Project Manager	$160.00/hr
Senior Modeler, Designer, Interior Designer / BIM Manager	$135.00/hr
Drafting Technician 2 / 3D Visualization Designer / Staff Engineer	$125.00/hr
Drafting Technician 1 / Junior Engineer	$115.00/hr
Clerical	$75.00/hr

Reimbursables

Blueprints printed outside of RGA	Cost +10%

Computer Plots

Line Drawings

24"x36" Bond	$2.75 each
30"x42" Bond	$3.50 each
36"x48" Bond	$4.40 each

Presentation Drawings

8.5"x11" Bond - Color	$1.55 each
11"x17" Bond - Color	$2.80 each
24"x36" Bond - Color	$11.50 each
30"x42" Bond - Color	$29.50 each
24"x36" Bond - Color – Mounted on Foam Core	$45.50 each
30"x42" Bond – Color – Mounted on Foam Core	$52.00 each
8.5"x11" Photo - Color	$15.50 each
11"x17" Photo - Color	$19.00 each
24"x36" Photo - Color	$58.00 each
30"x42" Photo – Color	$85.00 each
24"x36" Photo – Color - Mounted on Foam Core	$73.00 each
30"x42" Photo – Color – Mounted on Foam Core	$95.00 each

Photocopies

8-1/2" x 11"	$0.12/copy
8-1/2" x 14	$0.19/copy
11" x 17	$0.24/copy
Copies printed outside of RGA	Cost + 10%

Miscellaneous

Mileage	$0.73/mile
All Other Project Related Items	Cost + 10%

As of Jan 1, 2026